Cat.no.:E-PS

Cat.no.:E-GGC

Cat.no.:E-CSS

Cat.no.:E-FSV

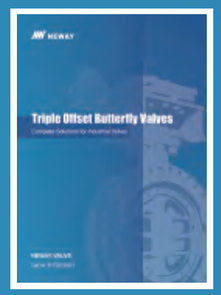

Cat.no.:TOBV

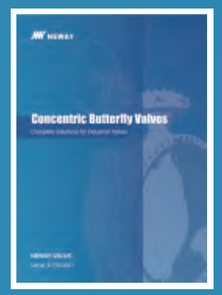

Cat.no.:E-CBV

Cat.no.:E-CV

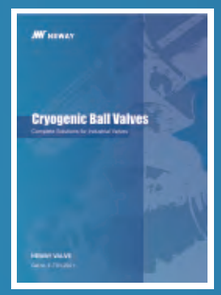

Cat.no.:E-CBV

Cat.no.:E-FWBV

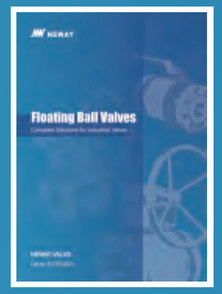

Cat.no.:E-FBV

Cat.no.:E-TMBV

Cat.no.:E-MSBV

NEWAY

NEWAY VALVE (SUZHOU) CO., LTD.

No.666 Taishan Road, Suzhou New District, P.R. China
Post Code: 215129
Tel: 86-512-666-15637
Fax: 86-512-666-18930-2102
E-mail: overseas.sales@neway.com.cn
https://www.newayvalve.com

Distributed by:

Cat.no.:E-GGC-2026

NEWAY

Gate, Globe & Check Valves

Complete Solutions for Industrial Valves

NEWAY VALVE

Cat.no.:E-GGC-2026

Table of Contents

Introduction

1 Quality Commitment
2 Product Range
3 Technical Innovation
4 Introduction of Foundries
5 Advanced Manufacturing & Quality Control
6 ~ 7 Typical Product View
8 How to Order

Gate Valve

9 Design Feature
10 Material List
11 ~ 16 Dimension % Weight

Globe Valve

17 Design Feature
18 Material List
19 ~ 21 Dimension % Weight

Check Valve

22 Design Feature
23 Material List
24 ~ 29 Dimension % Weight

30 **Pressure Seal Valve**

31 **High Temp. Cast Alloy Steel**

Pressure Seal Gate Valve

32 Design Feature
33 Material List
34 ~ 37 Dimension % Weight

Pressure Seal Globe Valve

38 Design Feature
39 Material List
40 ~ 41 Dimension % Weight

Pressure Seal Check Valve

42 Design Feature
43 Material List
44 ~ 47 Dimension % Weight

48 ~ 53 **Torque & Thrust**

54 **Gear Operator**

55 **Low Fugitive Emission Control**

56 ~ 57 **NACE Introduction**
Special Design Feature

Complete Solutions for Industrial Valves

As a global leader of valve manufacturing, Neway (SSE:603699) is dedicated to the production, research, and development of industrial valves. Neway is committed to providing complete valve solutions to all industries through advanced engineering and innovation.

Neway's product line includes Ball, Butterfly, Gate, Globe, Check, Nuclear, Control, Subsea, Safety valves. Our high quality standards and innovative ability are recognized by many global end users and EPCs. Neway valves are utilized in a wide variety of industries and working conditions such as Refining, Chemical, Coal Chemical, Offshore(including subsea), Air Separation, LNG, Nuclear Power, Power Generation, and Pipeline Transmission applications.

Facilities & Service

Neway has developed a sophisticated multi-plant management system operating two valve assembly plants for GGC/ball/Butterfly/Nuclear valves, one API 6A valve plant, one safety valve plant, four casting & forging plants, and three R&D centers. Our largest assembly plant was expanded in 2013, and it covers 230,000 square meters.

Advanced software (ANSYS, FE-Safe, CF-Design, Siemens PLM and NX) is applied here at Neway for the Research & Development of products. We use SPA&MES to control the traceability and status of all products during the manufacturing process. In order to ensure the safety, reliability, and environmental compliance of our products, we use advanced testing equipments for fire safe, cryogenic, high pressure, and fugitive emission performance verification.

As part of Neway's global strategy and to better serve our customers, we have established our overseas subsidiaries in the USA, the Netherlands, Italy, Singapore, Dubai, Nigeria, Vietnam, Malaysia, Qatar, and Saudi Arabia, along with over 80 agents and distributors worldwide.

Quality Assurance

Neway is dedicated to continuous improvement. We maintain a quality management system that encompasses our entire operation from order entry to final inspection. Through continuous efforts, Neway's products have successfully obtained industry certifications, including ASME UV & NB, NBBI, KGS, CE, CCS, and BV approvals.

Quality Commitment

Neway recognizes the importance of valve quality for the safety and protection of personnel heath and property. It is our quality commitment to focus our resources to provide our customers with first class products at a competitive price,that are designed, manufactured, inspected and tested in accordance with our customer's specifications and that comply with all international standards.

With respect to the facts that the current industrial standards do not always take into consideration the likelihood and consequences of possible deterioration in service, related to specific service fluids or the external environment in which they operate. Our customers are requested to keep an open line of communication with our engineering department to identify and implement standards, that will provide valves with the possibility of deterioration in service, so as to ensure safety over the valves expected lifetime.

Product Range

Bolted Bonnet Valve

Size \ Type	Gate Valve							Globe Valve							Check Valve						
	150	300	600	900	1500	2500	4500	150	300	600	900	1500	2500	4500	150	300	600	900	1500	2500	4500
2”	●	●	●	●	●	●	●	●	●	●	●	●	●	●	●	●	●	●	●	●	●
2.5”	●	●	●	●	●	●	●	●	●	●	●	●	●	●	●	●	●	●	●	●	●
3”	●	●	●	●	●	●	●	●	●	●	●	●	●	●	●	●	●	●	●	●	●
4”	●	●	●	●	●	●	●	●	●	●	●	●	●	●	●	●	●	●	●	●	●
5”	●	●	●	●	●	●	●	●	●	●	●	●	●	●	●	●	●	●	●	●	●
6”	●	●	●	●	●	●	●	●	●	●	●	●	●	●	●	●	●	●	●	●	●
8”	●	●	●	●	●	●	●	●	●	●	●	●	●	●	●	●	●	●	●	●	●
10”	●	●	●	●	●	●	●	●	●	●	●	●	●	●	●	●	●	●	●	●	
12”	●	●	●	●	●	●	●	●	●	●	●	●	●	●	●	●	●	●	●	●	
14”	●	●	●	●	●	●		●	●	●	●	●	●	●	●	●	●	●	●	●	
16”	●	●	●	●	●	●		●	●	●	●	●	●	●	●	●	●	●	●	●	
18”	●	●	●	●	●	●		●	●	●	●				●	●	●	●	●	●	
20”	●	●	●	●	●	●		●	●	●	●				●	●	●	●	●	●	
24”	●	●	●	●	●	●		●	●	●	●				●	●	●	●	●	●	
26”	●	●	●	●	●										●	●	●	●	●		
28”	●	●	●	●	●										●	●	●	●	●		
30”	●	●	●	●	●										●	●	●	●	●		
32”	●	●	●	●	●										●	●	●	●	●		
36”	●	●	●	●	●										●	●	●	●	●		
40”	●	●	●												●	●	●				
42”	●	●	●												●	●	●				
48”	●	●	●												●	●	●				
52”	●	●	●												●	●	●				
54”	●	●	●												●	●	●				
56”	●	●	●												●	●	●				
60”	●	●	●												●	●	●				
64”	●																				
66”	●																				
68”	●																				
70”	●																				
72”	●																				
88”	●																				

Pressure Seal Valve

Size \ Type	Gate Valve					Globe Valve					Check Valve				
	600	900	1500	2500	4500	600	900	1500	2500	4500	600	900	1500	2500	4500
2”	●	●	●	●	●	●	●	●	●	●	●	●	●	●	●
2.5”	●	●	●	●	●	●	●	●	●	●	●	●	●	●	●
3”	●	●	●	●	●	●	●	●	●	●	●	●	●	●	●
4”	●	●	●	●	●	●	●	●	●	●	●	●	●	●	●
5”	●	●	●	●	●	●	●	●	●	●	●	●	●	●	●
6”	●	●	●	●	●	●	●	●	●	●	●	●	●	●	●
8”	●	●	●	●	●	●	●	●	●	●	●	●	●	●	●
10”	●	●	●	●	●	●	●	●	●	●	●	●	●	●	
12”	●	●	●	●	●	●	●	●	●		●	●	●	●	
14”	●	●	●	●		●	●	●	●		●	●	●	●	
16”	●	●	●	●		●	●				●	●	●	●	
18”	●	●	●	●		●					●	●	●	●	
20”	●	●	●	●		●					●	●	●	●	
24”	●	●	●	●		●					●	●	●	●	
26”	●	●	●								●	●	●		
28”	●	●	●								●	●	●		
30”	●	●	●								●	●	●		
32”	●	●	●								●	●	●		
36”	●	●	●								●	●	●		
40”	●										●				
42”	●										●				
48”	●										●				
52”	●										●				
54”	●										●				
56”	●										●				
60”	●										●				

Note:
1. Face to face and end to end dimension conform to BS EN 558, BS EN 12627, ASME B16.10 or ISO 5752.
2. Flange is in line with ASME B16.5 in type and dimension.
3. BW end dimension conform to ASME B16.25
4. Inspection and test in accordance with API 598 or BS EN 12266.
5. Valves larger than 64”are manufactured per Neway standards.

Technical Innovation

Technical Innovation

With cutting-edge computer technology utilized, NEWAY Technical Center focuses on providing outstanding quality products and developing new lines. There is a highly educated and well-trained engineering team, supported by a comprehensive internal computer network which links the entire operations of design, manufacturing and administration.

NEWAY design philosophy is to develop a safe and cost-efficient valve. We introduced the latest Ansys. Fe-safe CF-design and NX software for all our new product design research which include the advanced finite element analysis, fluid and fatigue analysis to virtually verify the new design prior to production, which has resulted in dramatically shortening development duration and assure a safe and cost-efficient final product.

NEWAY technical personnel are always ready to offer on line or on site technical training and support for all of its distributors, agents and end users.

Flow Coefficient Test

Low Fugitive Emission Test

High Temperature Test

Fire Safe Test

Low Temperature Test

Introduction of Foundries

Valve casting quality is of prime importance for product life, personnel and environmental safety, particularly in high temperature and high pressure service as valve serves as one of pressure-containing equipment in process-controlled pipeline. Thus, castings are always certified firstly by the customers requiring strictly before a valve manufacturer is pre-qualified and approved as a qualified supplier.

Compared with most of other competitors, we own three foundries: two of them work on producing large-sized sand castings by organic ester water glass, and two of them are for production of small-sized investment castings by lost-wax casting. Besides, each is equipped with all kinds of quality inspection facilities, such as spectrum instrument, non-destructive test machinery, and mechanical property test device. Against such backdrop, Neway can monitor the whole process of manufacture to ensure product quality, delivery and competitive price and enable Neway to remain a creditable supplier for every customer.

Automatic Molding Line

Exported Sand Mixer

Automatic Forklift for Heat Treating

Supply Range & Capacity:

Plant Name	Dafeng Foundry	Suzhou Foundry
Process Technology	Lost wax investment casting	Organic ester water glass sand casting
Size Range (in)	1/2” ~10”	2” ~64”
Pressure Rating	ANSI Class 150~600	ANSI Class 150~2500
Weight (Kg)	1~150	100~11000
Material	WCB, WCC, LCB, LCC, WC6, WC9, C5, C12, C12A, CF8, CF8M, CF3, CF3M, CN7M, Monel, Inconel, Duplex Steel, 4A, 5A	
Monthly Capacity (Ton)	1500	1800
Quality Certificate	ISO9001, CE/PED, AD W0	ISO9001, CE/PED, Norsok

Advanced Manufacturing & Quality Control

The latest computer technology has been extensively applied in NEWAY manufacturing, which includes aa large number of numeric control machines (machining center, CNC horizontal and vertical lathe and CNC drilling machine) and ERP management system.Additionally, the data through all factories have been connected and shared. These facilitate resource integration, boost productivity, evidently enhancing machining quality and tightening process control.

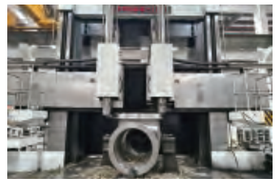

NEWAY developed comprehensive and advanced inspection and test facilities to control the quality from rough castings or forgings to final products, which enable us to perform radiographic test, liquid penetrant test, magnetic-particle test, spectrum analysis, Material Positive Identification (MPI), impact test, tensile test, hardness test, fire safe test, cryogenic test, vacuum test, low fugitive emission test, high pressure gas test, ultrasonic testing and hydrostatic test.

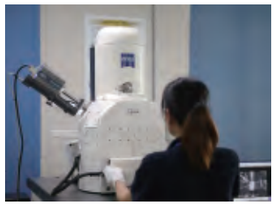

Typical Product View

1. 24” Class 900 Gate Valve
2. 88” Class 150 Gate Valve
3. 72” Class 150 Gate Valve
4. 66” Class 150 Crygenic Gate Valve
5. 40” Class 300 Crygenic Gate Valve
6. A182 F91 Gate Valve
7. 32” Class 900 Check Valve
8. 10” Class 300 Check Valve
9. A217 Gr. C12A Gate Valve

1

2

3

4

9

5

6

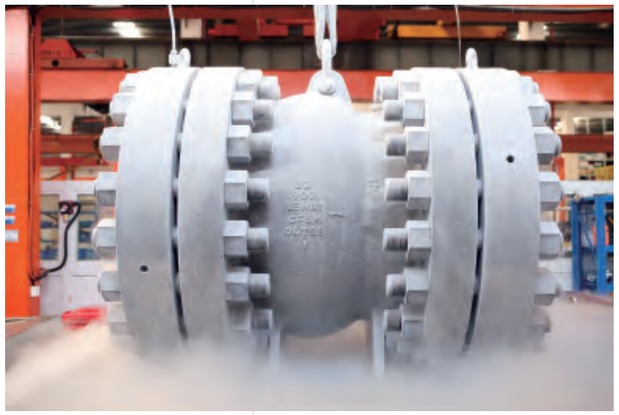

7

8

How To Order

Example:

4	GPS	15	R	-	G	,	C00	/	5	[*]
①	②	③	④		⑤		⑥		⑦	⑧

Neway figure numbers are designed to cover essential features. When ordering, please show the figure numbers and a detailed description to avoid misunderstanding of your requirements.

Following descriptions provide a basic guideline in valve specification:

① Valve Size

② Valve Type

Valve Type	Gate Valve	Pressure Seal Gate Valve	Bellows Seal Gate Valve	Globe Valve	Pressure Seal Globe Valve	Bellows Seal Globe Valve	Swing Check Valve	Pressure Seal Check Valve
Symbol	G	GPS	GBL	GL	GLP	GLB	SN	SPS

③ ANSI Class

Code	1	3	6	9	15	25	45
Class(LB)	150	300	600	900	1500	2500	4500

④ End Connection

Symbol	End	Symbol	End
R	Raised face flanged end	S	Socket welding end
J	RTJ flanged end	N	Screwed end
B	Butt-welding end	F	Flat face flanged end
W	Wafer		

⑤ Actuator

Symbol	Description	Symbol	Description
	Handwheel Operator	M	Electric Actuator
G	Gear Operator	P	Pneumatic actuator

⑥ Shell Material

Material	C00	L20	L21	H01	H02	H03	S00	S01	S02	S03	N04	H05
ASTM Ref	A216 Gr.WCB	A352 Gr.LCB	A352 Gr.LCC	A217 Gr.WC6	A217 Gr.WC9	A217 Gr.C5	A351 Gr.CF8	A351 Gr.CF8M	A351 Gr.CF3	A351 Gr.CF3M	A351 Gr.CN7M	A182 F91

⑦ Trim Material

API600 Trim Number	Symbol	Disc Surface	Seat Surface	Stem Material
1	1	13%Cr	13%Cr	ASTM A182 Grade F6a
2	2	18%Cr, 8%Ni	18%Cr, 8%Ni	ASTM A182 Grade F304
5	5	Stellite	Stellite	ASTM A182 Grade F6a
8	8	13%Cr	Stellite	ASTM A182 Grade F6a
9	9	Monel	Monel	Ni Cu Alloy Monel
10	10	18%Cr, 8%Ni	18%Cr, 8%Ni	ASTM A182 Grade F316
12	12	18%Cr, 8%Ni	Stellite	ASTM A182 Grade F316
13	13	Alloy 20 19%Cr, 29%Ni	Alloy 20 19%Cr, 29%Ni	Alloy 20
	16	Stellite	Stellite	ASTM A182 Grade F316
	20	Bronze	Bronze	Bronze

Note: 1.The denotation of trim No. 1 to 13 are the same as that of Table 8 in API 600.
2.Trim number 1 may be replaced by trim number 8 without notice.

⑧ Structure & Material Special Code

NEWAY reserves the right to change design, materials or specifications without notice and free of obligation to furnish or install such changes on products previouly sold.

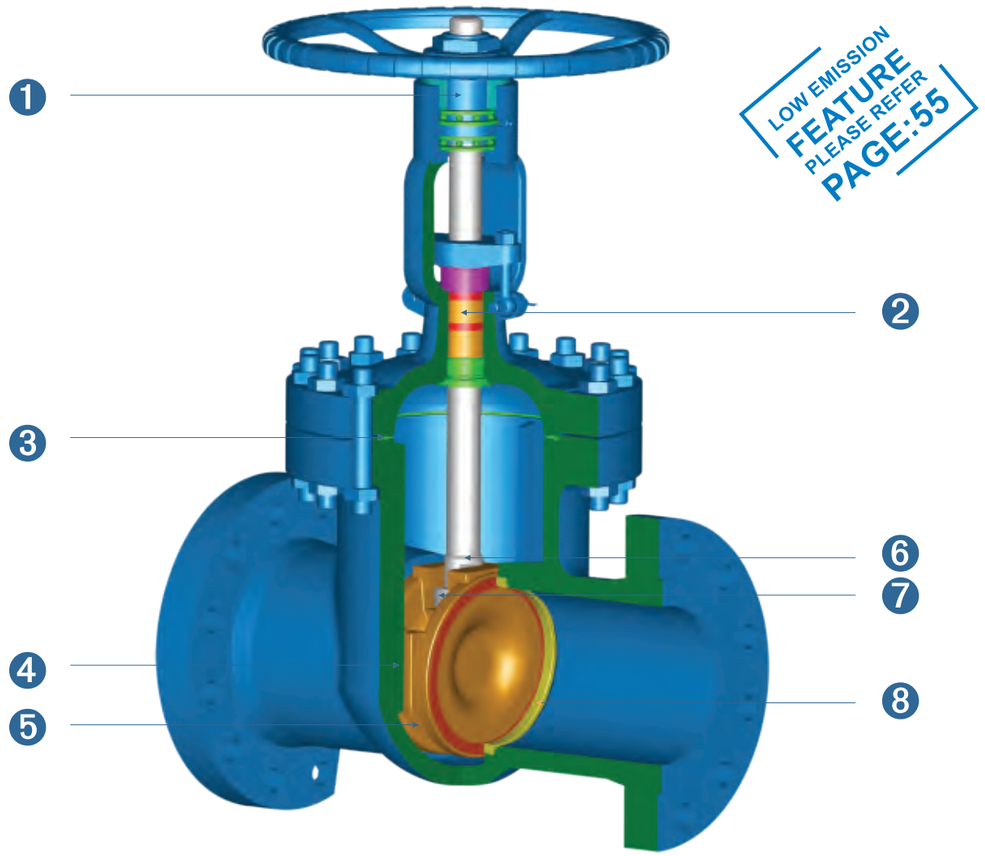

1. Long thread stem nut prolongs thread life and permits the removal of hand wheel in the fully open position.
2. Spacer ring in conjunction with packing is used in gate valves of 300 class and above while 150-class valve is only fitted with packing; packing with lantern ring is available upon customer request.
3. Flexible graphite gasket used for 150 Class gate valve, spiral wound gasket for Class 300 & 600 valves and metal ring gasket for gate valves of 900 or areater Class(600 Class is obtainable if customer requires)
4. Integral guide inside body keeps wedge self-centered during valve opening and closing.
5. Flexible wedge is able to compensate for seat surface distortion and body deformation caused by piping stress.
6. Blowout retention design: the tapered backseat face firmly contacts backseat of bonnet.
7. The strength of bonnet-wedge connection exceeds that of bonnet thread root.
8. Renewable seal welded seats with stellite 6 are standard design while screwed-in seats are optional.

NEWAY reserves the right to change design, materials or specifications without notice and free of obligation to furnish or install such changes on products previouly sold.

Part	Standard	Low Temperature Service	High Temperature Service	Stainless Steel	Sour Service
BODY	ASTM A216-WCB	ASTM A352-LCC	ASTM A217-WC9	ASTM A351-CF8M	ASTM A216-WCB
BONNET	ASTM A216-WCB	ASTM A352-LCC	ASTM A217-WC9	ASTM A351-CF8M	ASTM A216-WCB
WEDGE	ASTM A216-WCB/CR13 OVERLAY	ASTM A352-LCC/316 OVERLAY	ASTM A217-WC9/STL OVERLAY	ASTM A351-CF8M	ASTM A216-WCB/CR13 OVERLAY-NC
STEM NUT	ASTM A439 D-2 QAL9-4	ASTM A439 D-2 QAL9-4	ASTM A439 D-2 QAL9-4	ASTM A439 D-2 QAL9-4	ASTM A439 D-2 QAL9-4
GLAND FLANCE	ASTM A216-WCB ASTM A105	ASTM A352-LCC/LF2	ASTM A216-WCB ASTM A105	ASTM A351-CF8M /F316/F316L	ASTM A216-WCB ASTM A105
HANDWHEEL	DUCTILEIRON	DUCTILEIRON	DUCTILEIRON	DUCTILEIRON	DUCTILEIRON
SEAT RING	ASTM A105/STL. OVERLAY	ASTM A182-F316/STL. OVERLAY	ASTM A182-F22/STL. OVERLAY	ASTM A182-F316/STL. OVERLAY	ASTM A105/STL. OVERLAY
STEM	ASTM A182-F6a	ASTM A182-F316	ASTM A182-F6a	ASTM A182-F316	ASTM A182-F6a-NC
BACK SEAT	ASTM A276-420	ASTM A276-316L	ASTM A276-420	ASTM A276-316L	ASTM A276-420-NC
GLAND	ASTM A276-420	STAINLESS STEEL	ASTM A276-420	ASTM A276-316L	ASTM A276-420-NC
GASKET	SPIRAL WOUND GTAPHITE	SPIRAL WOUND GTAPHITE	SPIRAL WOUND GTAPHITE	SPIRAL WOUND GTAPHITE	SPIRAL WOUND GTAPHITE
MIDDLE PACKING	GRAPHITE	GRAPHITE	GRAPHITE	GRAPHITE	GRAPHITE
TOP/BOTTOM PACKING	316L + GRAPHITE	316L + GRAPHITE	316L + GRAPHITE	316L + GRAPHITE	316L + GRAPHITE
RETAINING NUT	CARBON STEEL	CARBON STEEL	CARBON STEEL	CARBON STEEL	CARBON STEEL
HANDWHEEL NUT	CARBON STEEL	CARBON STEEL	CARBON STEEL	STAINLESS STEEL	CARBON STEEL
BONNET STUD	ASTM A193-B7	ASTM A320-L7M	ASTM A193-B16	ASTM A193-B8 Class2	ASTM A193-B7M
BONNET NUT	ASTM A194-2H	ASTM A194-7M	ASTM A194-7	ASTM A194-8	ASTM A194-2HM
EYE BOLT	ASTM A193-B7	ASTM A320-L7M	ASTM A193-B16	ASTM A193-B8	ASTM A193-B7M
GLAND NUT	ASTM A194-2H	ASTM A194-7M	ASTM A194-7	ASTM A194-8	ASTM A194-2HM
EYE BOLT PIN	CARBON STEEL	STAINLESS STEEL	STAINLESS STEEL	STAINLESS STEEL	CARBON STEEL
NAME PLATE	STAINLESS STEEL	STAINLESS STEEL	STAINLESS STEEL	STAINLESS STEEL	STAINLESS STEEL

Notes: Above materials are general, when ordered, Please contact NEWAY Sales or technical team to confirm the details.

Class 150 Cast Carbon Steel Gate Valve

API 600 Design,
Bolted Bonnet, OS&Y,
Screwed-in Back seat, Rising Stem,
Non-rising Handwheel,
Flexible Wedge

Figure NO.:
G1R,C00/8
G1B,C00/8

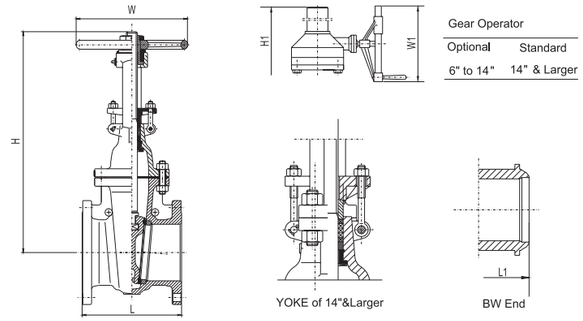

NPS	DN	L(RF)		L1(BW)		W		W1		H		H1		WT(RF)	WT(BW)
in	mm	in	mm	in	mm	in	mm	in	mm	in	mm	in	mm	kg	kg
2”	50	7	178	8.5	216	8	200	-	-	12	316	-	-	18	14
3”	80	8	203	11.12	282	10	250	-	-	14	361	-	-	31	27
4”	100	9	229	12	305	10	250	-	-	17	432	-	-	45	38
6”	150	10.5	267	15.88	403	12	300	-	-	23	587	-	-	73	77
8”	200	11.5	292	16.5	419	14	350	-	-	29	733	-	-	109	102
10”	250	13	330	18	457	16	400	-	-	34	871	-	-	175	155
12”	300	14	356	19.75	502	18	450	12	305	40	1022	54	1367	261	230
14”	350	15	381	22.5	572	-	-	18	460	-	-	60	1524	348	318
16”	400	16	406	24	610	-	-	18	460	-	-	68	1731	457	433
18”	450	17	432	26	660	-	-	18	460	-	-	77	1963	566	530
20”	500	18	457	28	711	-	-	24	610	-	-	86	2186	702	672
24”	600	20	508	32	813	-	-	24	610	-	-	101	2565	1058	1002
26”	650	22	559	34	864	-	-	24	610	-	-	110	2785	1670	1620
28”	700	24	610	36	914	-	-	24	610	-	-	117	2960	1958	1900
30”	750	24	610	36	914	-	-	24	610	-	-	124	3145	2265	2160
32”	800	-	711	38	965	-	-	24	610	-	-	129	3277	2630	2500
34”	850	-	762	39.37	1016	-	-	24	610	-	-	131	3321	3220	3059
36”	900	28	711	40	1016	-	-	24	610	-	-	141	3594	3634	3400
38”	950	30	762	41.34	1050	-	-	24	610	-	-	162	4111	4050	3848
40”	1000	30	762	42	1067	-	-	24	610	-	-	165	4200	4660	4430
42”	1050	31	787	43	1092	-	-	31	800	-	-	172	4372	4940	4690
44”	1100	32.01	813	43.7	1110	-	-	31	800	-	-	181	4605	5474	5200
46”	1150	32.99	838	45.28	1150	-	-	31	800	-	-	185	4687	6050	5748
48”	1200	34	864	46	1168	-	-	31	800	-	-	197	5011	6605	6200
50”	1250	36	914	-	-	-	-	31	800	-	-	204	5180	7540	-
52”	1300	38	965	-	-	-	-	31	800	-	-	208	5292	7985	-
54”	1350	40	1016	-	-	-	-	31	800	-	-	227	5774	8600	-
56”	1400	-	1067	-	-	-	-	31	800	-	-	235	5975	9050	-
58”	1450	47.01	1194	-	-	-	-	31	800	-	-	241	6123	-	-
60”	1500	50	1270	-	-	-	-	39	1000	-	-	248	6305	13500	-
62”	1550	-	1270	-	-	-	-	39	1000	-	-	256	6490	-	-
64”	1600	-	1270	-	-	-	-	39	1000	-	-	263	6675	17000	-
66”	1650	-	1270	-	-	-	-	39	1000	-	-	270	6850	-	-
68”	1700	-	1800	-	-	-	-	39	1000	-	-	278	7050	-	-
70”	1750	-	1980	-	-	-	-	39	1000	-	-	285	7250	-	-
72”	1800	-	1980	-	-	-	-	39	1000	-	-	293	7450	-	-
88”	2200	90.55	2300	-	-	-	-	-	-	-	-	-	-	-	-

"(1) For valves larger than 88", Please contact Neway sales or engineering team for details.

Class 300 Cast Carbon Steel Gate Valve

API 600 Design,
Bolted Bonnet, OS&Y,
Screwed-in Back seat, Rising Stem,
Non-rising Handwheel,
Flexible Wedge

Figure NO.:
G3R,C00/8
G3B,C00/8

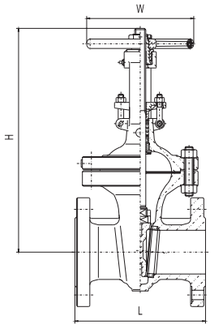

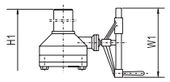

Gear Operator

Optional	Standard
6" to 12"	12" & Larger

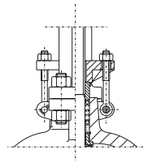

YOKE of 12" &Larger

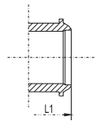

BW End

NPS	DN	L & L1(RF & BW)		W		W1		H		H1		WT(RF)	WT(BW)
in	mm	in	mm	in	mm	in	mm	in	mm	in	mm	kg	kg
2”	50	8.5	216	8	200	-	-	12	316	-	-	24	18
3”	80	11.12	283	10	250	-	-	14	366	-	-	43	32
4”	100	12	305	10	250	-	-	17	442	-	-	65	46
6”	150	15.88	403	14	350	-	-	24	609	-	-	129	97
8”	200	16.5	419	16	400	12	305	30	754	40	1016	196	148
10”	250	18	457	18	450	18	460	36	902	49	1247	286	246
12”	300	19.75	502	20	500	18	460	41	1050	55	1401	421	374
14”	350	30	762	-	-	18	460	-	-	61	1557	627	502
16”	400	33	838	-	-	12	305	-	-	68	1723	819	659
18”	450	36	914	-	-	32	800	-	-	77	1948	1077	866
20”	500	39	991	-	-	40	1000	-	-	87	2204	1338	1088
24”	600	45	1143	-	-	40	1000	-	-	101	2557	2071	1771
26”	650	49	1245	-	-	24	610	-	-	113	2865	3090	2540
28”	700	53	1346	-	-	24	610	-	-	117	2968	3860	3604
30”	750	55	1397	-	-	24	610	-	-	126	3209	4948	4414
32”	800	60	1524	-	-	31	800	-	-	136	3444	5510	4820
34”	850	64.02	1626	-	-	32	810	-	-	147	3743	6598	5595
36“	900	68	1727	-	-	39	1000	-	-	150	3822	7700	6950
38”	950	72.01	1829	-	-	39	1000	-	-	174	4416	8788	7932
40”	1000	76	1930	-	-	39	1000	-	-	173	4383	10130	9660
42”	1050	78	1981	-	-	39	1000	-	-	177	4500	11270	10780
44”	1100	81.89	2080	-	-	39	1000	-	-	186	4735	12612	12064
46”	1150	85.98	2184	-	-	39	1000	-	-	196	4970	14612	13977
48”	1200	88	2235	-	-	39	1000	-	-	200	5078	16000	15310
50”	1250	90	2286	-	-	39	1000	-	-	203	5157	18000	17224
52”	1300	92.01	2337	-	-	39	1000	-	-	226	5751	19388	18552
54”	1350	94.02	2388	-	-	39	1000	-	-	225	5718	21388	20466
56”	1400	95.98	2438	-	-	39	1000	-	-	230	5835	22776	21794
58”	1450	97.99	2489	-	-	39	1000	-	-	239	6070	24776	23708
60”	1500	-	2580	-	-	39	1000	-	-	-	6400	33000	31000

"(1) For valves larger than 60", Please contact Neway sales or engineering team for details.

Class 600 Cast Carbon Steel Gate Valve

API 600 Design,
Bolted Bonnet, OS&Y,
Screwed-in Back seat, Rising Stem,
Non-rising Handwheel,
Flexible Wedge

Figure NO.:
G6R,C00/8
G6J,C00/8
G6B,C00/8

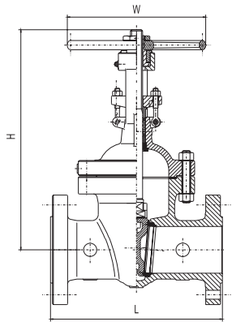

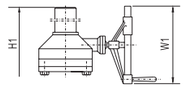

Gear Operator

Optional	Standard
4" to 10"	10" & Larger

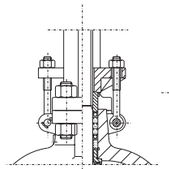

YOKE of 10" &Larger

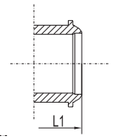

BW End

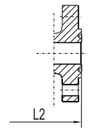

RTJ End

NPS	DN	L & L1(RF & BW)		L2(RTJ)		W		W1		H		H1		WT(RF)	WT(BW)
in	mm	in	mm	in	mm	in	mm	in	mm	in	mm	in	mm	kg	kg
2”	50	11.5	292	11.62	295	10	250	-	-	13	324	-	-	29	23
3”	80	14	356	14.12	359	10	250	-	-	15	385	-	-	53	42
4”	100	17	432	17.12	435	14	350	-	-	19	474	-	-	94	68
6”	150	22	559	22.12	562	18	450	12	305	26	657	34	868	216	160
8”	200	26	660	26.12	663	20	500	18	460	31	787	41	1040	362	310
10”	250	31	787	31.12	790	-	-	12	305	-	-	48	1220	591	466
12”	300	33	838	33.12	841	-	-	32	800	-	-	58	1465	817	687
14”	350	35	889	35.12	892	-	-	32	800	-	-	63	1592	1017	852
16”	400	39	991	39.12	994	-	-	24	610	-	-	70	1778	1423	1188
18”	450	43	1092	43.12	1095	-	-	32	800	-	-	76	1928	1844	1510
20”	500	47	1194	47.25	1200	-	-	24	610	-	-	85	2150	2372	1922
24”	600	55	1397	55.38	1407	-	-	24	610	-	-	103	2613	3632	3193
26”	650	57	1448	57.5	1461	-	-	32	810	-	-	124	3150	5370	4771
28”	700	61	1549	61.5	1562	-	-	39	1000	-	-	132	3362	6370	5660
30”	750	65	1651	65.5	1662	-	-	39	1000	-	-	140	3549	7200	6400
32”	800	70	1778	70.6	1794	-	-	39	1000	-	-	150	3811	8520	7700
34”	850	75.98	1930	76.61	1946	-	-	39	1000	-	-	158	4013	9820	9000
36”	900	82	2083	82.6	2099	-	-	39	1000	-	-	168	4260	11890	10800
38”	950	86.02	2185	86.65	2201	-	-	39	1000	-	-	178	4522	13674	12358
40”	1000	90	2286	90.63	2302	-	-	47	1200	-	-	184	4670	15724	14283
42”	1050	96	2438	96.61	2454	-	-	47	1200	-	-	194	4921	16305	15120
44”	1100	97.32	2472	97.95	2488	-	-	47	1200	-	-	204	5183	18750	16947
46”	1150	98.66	2506	99.29	2522	-	-	47	1200	-	-	214	5445	21563	19587
48”	1200	100	2540	100.63	2556	-	-	47	1200	-	--	231	5876	24798	22996
50”	1250	100	2540	100.63	2556	-	-	47	1200	-	-	240	6088	28517	25774
52”	1300	102.52	2604	103.15	2620	-	-	47	1200	-	-	247	6275	32795	29789
54”	1350	105.04	2668	105.67	2684	-	-	47	1200	-	-	257	6537	37714	34974
56”	1400	107.56	2732	108.19	2748	-	-	47	1200	-	-	251	6386	43371	39199
58”	1450	110.08	2796	110.71	2812	-	-	47	1200	-	-	275	6986	49877	45305
60”	1500	112.6	2860	113.23	2876	-	-	47	1200	-	-	285	7248	57359	53191

"(1) For valves larger than 60", Please contact Neway sales or engineering team for details.

Class 900 Cast Carbon Steel Gate Valve

API 600 Design,
Bolted Bonnet, OS&Y,
Screwed-in Back seat, Rising Stem,
Non-rising Handwheel,
Flexible Wedge

Figure NO.:
G9R,C00/5
G9J,C00/5
G9B,C00/5

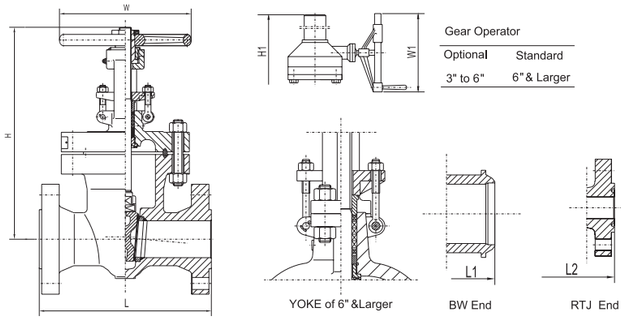

NPS	DN	L & L1(RF & BW)		L2(RTJ)		W		W1		H		H1		WT(RF)	WT(BW)
in	mm	in	mm	in	mm	in	mm	in	mm	in	mm	in	mm	kg	kg
2”	50	14.5	368	14.62	371	10	250	-	-	20	498	-	-	90	74
2.5”	65	16.5	419	16.62	422	12	300	-	-	22	547	-	-	100	90
3”	80	15	381	15.12	384	14	350	12	305	23	573	27	677	115	100
4”	100	18	457	18.12	460	16	400	12	305	27	678	29	727	180	162
5”	125	22	559	22.12	562	18	450	12	305	33	850	36	904	335	258
6”	150	24	610	24.12	613	20	500	18	460	35	900	37	929	355	292
8”	200	29	737	29.12	740	24	600	18	460	43	1103	50	1262	665	528
10”	250	33	838	33.12	841	-	-	24	610	-	-	53	1345	1076	884
12”	300	38	965	38.12	968	-	-	24	610	-	-	60	1520	1430	1195
14”	350	40.5	1029	40.88	1038	-	-	24	610	-	-	70	1784	1965	1726
16”	400	44.5	1130	44.88	1140	-	-	31	800	-	-	74	1874	2690	2305
18”	450	48	1219	48.5	1232	-	-	31	800	-	-	87	2212	3264	2785
20”	500	52	1321	52.48	1333	-	-	31	800	-	-	94	2384	4425	4014
22”	550	56.5	1435	57.24	1454	-	-	39	1000	-	-	99	2502	5553	4897
24”	600	61	1549	61.73	1568	-	-	39	1000	-	-	103	2620	6680	5780
26”	650	65	1664	66.34	1685	-	-	39	1000	-	-	112	2833	9686	8234
28”	700	70	1778	70.83	1799	-	-	39	1000	-	-	115	2916	14045	11938
30”	750	74	1892	75.31	1913	-	-	47	1200	-	-	118	3000	20365	17310
32”	800	78	2004	79.72	2025	-	-	47	1200	-	-	121	3083	29529	25100
34”	850	83	2075	82.76	2102	-	-	47	1200	-	-	125	3167	42817	36394
36”	900	87	2232	88.94	2259	-	-	47	1200	-	-	128	3250	62085	52772

"(1) For valves larger than 36", Please contact Neway sales or engineering team for details.

Class 1500 Cast Carbon Steel Gate Valve

API 600 Design,
Bolted Bonnet, OS&Y,
Screwed-in Back seat, Rising Stem,
Non-rising Handwheel,
Flexible Wedge

Figure NO.:
G15R,C00/5
G15J,C00/5
G15B,C00/5

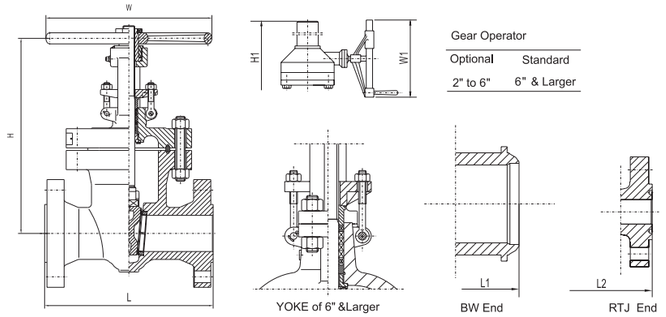

NPS	DN	L & L1(RF & BW)		L2(RTJ)		W		W1		H		H1		WT(RF)	WT(BW)
in	mm	in	mm	in	mm	in	mm	in	mm	in	mm	in	mm	kg	kg
2”	50	14.5	368	14.62	371	14	350	12	305	22	550	26	648	95	76
2.5”	65	16.5	419	16.62	422	12	300	-	-	23	582	-	-	131	105
3”	80	18	470	18.62	473	20	500	12	305	26	648	26	667	180	125
4”	100	21.5	546	21.62	549	22	550	18	458	28	700	30	759	248	205
5”	125	26.5	673	26.61	676	24	600	18	458	35	900	39	1000	510	420
6”	150	27.75	705	28	711	24	600	18	458	39	984	43	1091	590	505
8”	200	32.75	832	33.13	842	-	-	18	458	-	-	51	1290	1086	910
10”	250	39	991	39.38	1000.5	-	-	18	458	-	-	54	1372	1786	1485
12”	300	44.5	1130	45.12	1146	-	-	24	610	-	-	65	1639	2766	2386
14”	350	49.5	1257	50.25	1276	-	-	24	610	-	-	70	1768	3605	2970
16”	400	54.5	1384	55.38	1407	-	-	24	610	-	-	72	1836	4410	3665
18”	450	60.5	1537	61.4	1559	-	-	39	1000	-	-	87	2220	6040	5145
20”	500	65.5	1664	66.4	1686	-	-	31	800	-	-	121	3078	8270	7045
22”	550	71	1804	72.1	1832	-	-	39	1000	-	-	131	3320	11325	9645
24”	600	76.5	1943	77.6	1972	-	-	39	1000	-	-	141	3570	15511	13212
26”	650	82	2083	83.1	2111	-	-	47	1200	-	-	151	3836	21243	18096
28”	700	87.5	2223	88.6	2251	-	-	47	1200	-	-	158	4012	29095	24784
30”	750	93	2362	94.1	2390	-	-	47	1200	-	-	172	4368	39849	33944
32”	800	100	2540	101.1	2568	-	-	47	1200	-	-	184	4675	54577	46490
34”	850	107.5	2730	108.6	2758	-	-	47	1200	-	-	197	5005	74748	63672
36”	900	115.6	2935	116.7	2963		-	47	1200	-	-	211	5360	102375	87205

"(1) For valves larger than 36", Please contact Neway sales or engineering team for details.

Class 2500 Cast Carbon Steel Gate Valve

API 600 Design,
Bolted Bonnet, OS&Y, Rising Stem,
Non-rising Handwheel,
Flexible Wedge

Figure NO.:
G25R,C00/5
G25J,C00/5
G25B,C00/5

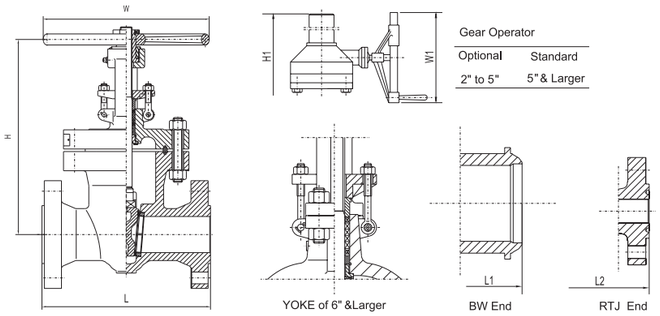

NPS	DN	L & L1(RF & BW)		L2(RTJ)		W		W1		H		H1		WT(RF)	WT(BW)
in	mm	in	mm	in	mm	in	mm	in	mm	in	mm	in	mm	kg	kg
2”	50	17.76	451	17.88	454	18	450	12	305	22	571	27	680	150	120
2.5”	65	20	508	20.25	514	16	400	-	-	25	637	-	746	200	150
3”	80	22.76	578	23	584	22	550	18	458	28	703	32	812	279	223
4”	100	26.5	673	26.88	683	26	650	18	458	29	742	34	861	305	285
5”	125	31.26	794	31.77	807	-	-	24	610	-	-	37	950	650	540
6”	150	35.98	914	36.5	927	-	-	18	458	-	-	38	968	1116	896
8”	200	40.24	1022	40.88	1038	-	-	28	710	-	-	51	1302	1860	1552
10”	250	50	1270	50.88	1292	-	-	31	800	-	-	72	1837	3885	3275
12”	300	55.98	1422	56.88	1445	-	-	32	810	-	-	76	1940	4925	4110
14”	350	62.01	1575	62.87	1597	-	-	32	810	-	-	84	2134	7380	6200
16”	400	67.99	1727	69.09	1755	-	-	32	810	-	-	92	2347	11070	9299
18”	450	73.98	1879	75.08	1907	-	-	39	1000	-	-	102	2582	16605	13948
20”	500	79.96	2031	81.06	2059	-	-	39	1000	-	-	112	2840	24908	20922
22”	550	85.94	2183	87.05	2211	-	-	39	1000	-	-	123	3125	37360	31380
24”	600	91.93	2335	93.03	2363	-	-	39	1000	-	-	135	3436	56040	47074

"(1) For valves larger than 24", Please contact Neway sales or engineering team for details.

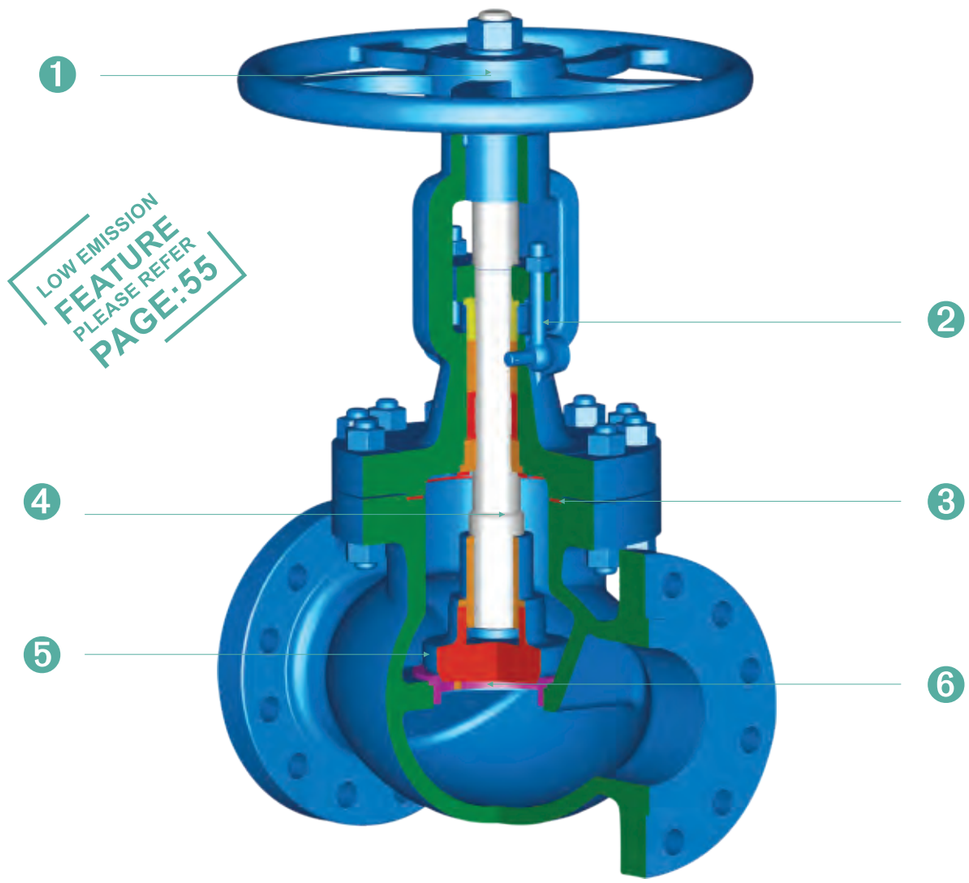

1. Impact handwheel supplied at manufacturer's option or on customer request.
2. Gland eyebolts are mounted to swing aside to facilitate packing maintenance.
3. Male and female bonnet joints for Class 150 to 600 valves, and ring joint for the Class 900 & above valves or as an option for Class 600 valves on customer request.
4. Anti blow-out stem design with conical backseat surface to permit repacking of valve in the fully open position.
5. Plug seat surface is standard disc design as well as spherical, parabola or flat seating surface is optional on customer request.
6. Seat face with stellite 6 is standard design.

Part	Standard	Low Temperature Service	High Temperature Service	Stainless Steel	Sour Service
BODY	ASTM A216-WCB	ASTM A352-LCC	ASTM A217-WC9	ASTM A351-CF8M	ASTM A216-WCB
BONNET	ASTM A216-WCB	ASTM A352-LCC	ASTM A217-WC9	ASTM A351-CF8M	ASTM A216-WCB
DISC	ASTM A182-F6a ASTM A105/ER410 (FOR 4"&Larger)	ASTM A182-F316	ASTM A182-F22/ STL.OVERLAY	ASTM A182-F316	ASTM A182-F6a-NC
STEM NUT	ASTM A439 D-2 QAL9-4	ASTM A439 D-2 QAL9-4	ASTM A439 D-2 QAL9-4	ASTM A439 D-2 QAL9-4	ASTM A439 D-2 QAL9-4
GLAND FLANCE	ASTM A216-WCB	ASTM A352-LCB	ASTM A216-WCB	ASTM A351-CF8	ASTM A216-WCB
HANDWHEEL	DUCTILEIRON	DUCTILEIRON	DUCTILEIRON	DUCTILEIRON	DUCTILEIRON
IMPACT BLOCK	CARBON STEEL	CARBON STEEL	CARBON STEEL	CARBON STEEL	CARBON STEEL
RETAINER PLATE	CARBON STEEL	CARBON STEEL	CARBON STEEL	CARBON STEEL	CARBON STEEL
SEAT RING	ASTM A105/STL. OVERLAY	ASTM A182-F316/STL. OVERLAY	ASTM A182-F22/STL. OVERLAY	ASTM A182-F316/STL. OVERLAY	ASTM A105/STL. OVERLAY
STEM	ASTM A182-F6a	ASTM A182-F316	ASTM A182-F6a	ASTM A182-F316	ASTM A182-F6a-NC
BACK SEAT	ASTM A276-420	ASTM A276-316	ASTM A276-420	ASTM A276-316	ASTM A276-420-NC
GLAND	ASTM A276-420	STAINLESS STEEL	ASTM A276-420	ASTM A276-316	ASTM A276-420-NC
SPACE RING	ASTM A276-420	ASTM A276-316	ASTM A276-420	ASTM A276-316	ASTM A276-420-NC
DISC NUT	ASTM A276-420	ASTM A276-316	ASTM A276-420	ASTM A276-316	ASTM A276-420-NC
STEM WASHER	ASTM A276-430	N/A	ASTM A276-430	N/A	STAINLESS STEEL
HANDWHEEL WASHER	CARBON STEEL	CARBON STEEL	CARBON STEEL	STAINLESS STEEL	CARBON STEEL
BONNET GASKET	SOFT STEEL	ASTM A276-316	SOFT STEEL	ASTM A276-316	SOFT STEEL
PACKING	316L + GRAPHITE	316L + GRAPHITE	316L + GRAPHITE	316L + GRAPHITE	316L + GRAPHITE
PACKING	GRAPHITE	GRAPHITE	GRAPHITE	GRAPHITE	GRAPHITE
BONNET STUD	ASTM A193-B7	ASTM A320-L7M	ASTM A193-B16	ASTM A193-B8 Class2	ASTM A193-B7M
BONNET NUT	ASTM A194-2H	ASTM A194-7M	ASTM A194-7	ASTM A194-8	ASTM A194-2HM
EYE BOLT	ASTM A193-B7	ASTM A320-L7M	ASTM A193-B16	ASTM A193-B8	ASTM A193-B7M
GLAND NUT	ASTM A194-2H	ASTM A194-7M	ASTM A194-7	ASTM A194-8	ASTM A194-2HM
HANDWHEEL NUT	CARBON STEEL	CARBON STEEL	CARBON STEEL	STAINLESS STEEL	CARBON STEEL
EYE BOLT PIN	CARBON STEEL	STAINLESS STEEL	STAINLESS STEEL	STAINLESS STEEL	CARBON STEEL
NAME PLATE	STAINLESS STEEL	STAINLESS STEEL	STAINLESS STEEL	STAINLESS STEEL	STAINLESS STEEL

Class 150 Cast Carbon Steel Globe Valve

BS 1873 Design,
Bolted Bonnet, OS&Y,
Screwed-in Back seat,
Rising Stem and Handwheel,
Swivel Disc

Figure NO.:
GL1R,C00/8
GL1B,C00/8

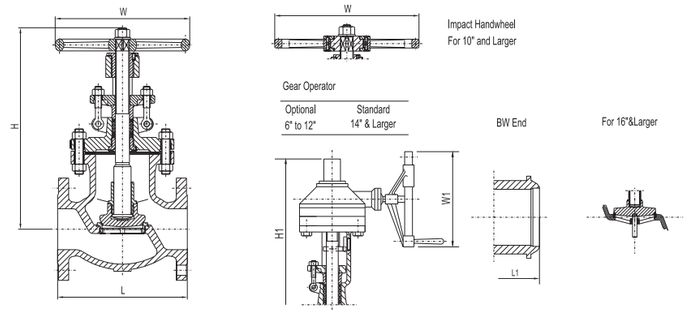

NPS	DN	L & L1(RF & BW)		W		W1		H		H1		WT(RF)	WT(BW)
in	mm	in	mm	in	mm	in	mm	in	mm	in	mm	kg	kg
2"	50	8	203	8	200	-	-	13	338	-	-	19	16
2.5"	65	8.5	216	10	250	-	-	15	373	-	-	25	21
3"	80	9.5	241	10	250	-	-	16	396	-	-	35	29
3.5"	90	10.5	267	10	250	-	-	16	414	-	-	35	29
4"	100	11.5	292	12	300	-	-	19	476	-	-	48	40
5"	125	14	356	14	350	-	-	20	497	-	-	95	80
6"	150	16	406	14	350	12	305	21	524	24	606	104	87
8"	200	19.5	495	16	400	12	305	23	588	26	660	158	132
10"	250	24.5	622	20	500	18	458	29	738	30	752	315	264
12"	300	27.5	699	22	560	18	458	34	862	35	894	534	447
14"	350	31	787	-	-	18	458	-	-	40	1025	614	514
16"	400	36	914	-	-	24	610	-	-	44	1105	910	762
18"	450	38.5	978	-	-	24	610	-	-	48	1213	1034	866
20"	500	38.5	978	-	-	24	610	-	-	52	1325	1430	1197
24"	600	51	1295	-	-	24	610	-	-	61	1549	1890	1582

"(1) For valves larger than 24", Please contact Neway sales or engineering team for details.

Class 300 Cast Carbon Steel Globe Valve

BS 1873 Design,
Bolted Bonnet, OS&Y,
Screwed-in Back seat,
Rising Stem and Handwheel,
Swivel Disc

Figure NO.:
GL3R,C00/8
GL3B,C00/8

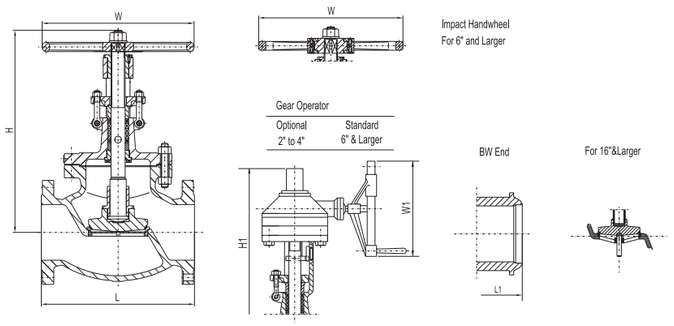

NPS	DN	L & L1(RF & BW)		W		W1		H		H1		WT(RF)	WT(BW)
in	mm	in	mm	in	mm	in	mm	in	mm	in	mm	kg	kg
2"	50	10.5	267	8	200	12	305	13	333	18	447	28	24
2.5"	65	11.5	292	10	250	12	305	14	365	18	469	28	24
3"	80	12.5	318	10	250	12	305	15	391	18	466	50	42
3.5"	90	13.3	337	12	300	-	-	17	440	-	-	65	55
4"	100	14	356	14	350	12	305	18	459	21	541	80	68
5"	125	15.7	400	18	450	12	305	21	533	21	541	134	114
6"	150	17.5	444	20	500	12	305	25	627	28	719	180	153
8"	200	22	559	22	560	18	458	30	765	33	833	325	276
10"	250	24.5	622	24	600	24	610	33	836	41	1045	460	390
12"	300	28	711	26	650	28	710	35	901	46	1157	724	614
14"	350	33	838	28	700	24	610	46	1160	40	1027	1125	955
16"	400	34	864	31	800	24	610	52	1310	55	1390	1650	1400
18"	450	38.5	978	-	-	32	810	-	-	63	1595	1877	1593
20"	500	40	1016	-	-	39	1000	-	-	63	1606	2125	1803
24"	600	53	1346	-	-	39	1000	-	-	75	1917	2373	2014

"(1) For valves larger than 24", Please contact Neway sales or engineering team for details.

Class 600 Cast Carbon Steel Globe Valve

BS 1873 Design,
Bolted Bonnet, OS&Y,
Screwed-in Back seat,
Rising Stem and Handwheel,
Swivel Disc

Figure NO.:
GL6R,C00/8
GL6B,C00/8

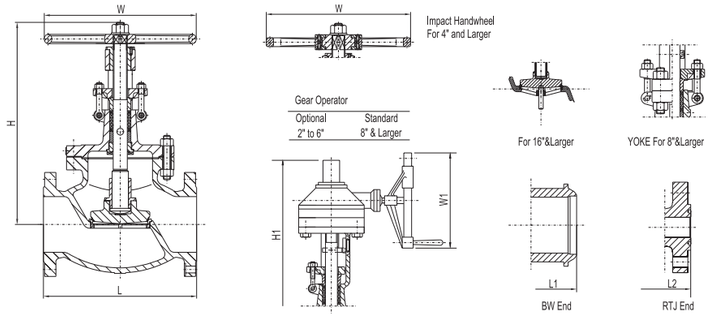

NPS	DN	L & L1(RF-BW)		L2(RTJ)		W		W1		H		H1		WT(RF)	WT(BW)
in	mm	in	mm	in	mm	in	mm	in	mm	in	mm	in	mm	kg	kg
2”	50	11.5	292	11.61	295	10	250	12	305	15	375	19	475	36	29
2.5”	65	13	330	13.11	333	12	300	-	-	17	432	-	-	50	42
3”	80	14	356	14.13	359	14	350	18	458	18	467	24	614	78	64
4”	100	17	432	17.13	435	18	450	12	305	22	570	25	626	126	91
5”	125	20	508	20.12	511	20	500	18	460	28	700	29	728	200	155
6”	150	22	559	22.13	562	22	560	18	458	29	740	33	829	284	227
8”	200	26	660	26.1	663	24	600	24	610	38	962	41	1052	543	460
10”	250	31	787	31.1	790	28	700	24	610	44	1106	46	1173	700	562
12”	300	33	838	33.11	841	31	800	24	610	49	1236	55	1399	900	739
14”	350	35	889	35.12	892	-	-	32	810	-	-	57	1454	1620	1054
16”	400	39	991	39.13	994	-	-	39	1000	-	-	61	1539	2160	1242
18”	450	43	1092	43.11	1095	-	-	47	1200	-	-	69	1764	3020	2310
20”	500	47	1194	47.24	1200	-	-	31	800	-	-	79	2000	3631	2778
24”	600	55.4	1407	55.79	1417	-	-	39	1000	-	-	90	2283	6320	4835

"(1) For valves larger than 24", Please contact Neway sales or engineering team for details.

Class 900 Cast Carbon Steel Globe Valve

BS 1873 Design,
Bolted Bonnet, OS&Y,
Screwed-in Back seat,
Rising Stem and Handwheel,
Swivel Disc

Figure NO.:
GL9R,C00/5
GL9J,C00/5
GL9B,C00/5

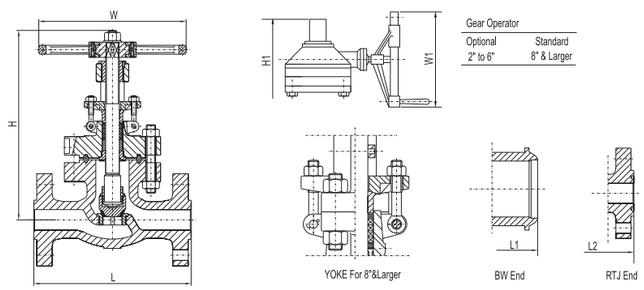

NPS	DN	L & L1(RF-BW)		L2(RTJ)		W		W1		H		H1		WT(RF)	WT(BW)
in	mm	in	mm	in	mm	in	mm	in	mm	in	mm	in	mm	kg	kg
2”	50	14.5	368	14.61	371	14	350	18	458	19	476	21	521	90	75
2.5”	65	16.5	419	16.61	422	14	350	-	-	20	500	-	-	125	85
3”	80	15	381	15.12	384	18	450	18	460	21	528	24	599	146	116
4”	100	18	457	18.11	460	20	500	18	458	26	657	32	803	180	158
6”	150	24	610	24.13	613	24	600	24	610	37	941	35	883	550	474
8”	200	29	737	29.13	740	-	-	24	610	-	-	43	1091	950	597
10”	250	33	838	33.11	841	-	-	24	610	-	-	51	1284	1270	1108
12”	300	38	965	38.11	968	-	-	39	1000	-	-	59	1500	1650	1245
14”	350	40.5	1029	40.91	1039	-	-	39	1000	-	-	69	1763	2235	1780
16”	400	44.5	1130	44.88	1140	-	-	39	1000	-	-	77	1967	3350	2670

"(1) For valves larger than 16", Please contact Neway sales or engineering team for details.

Class 1500 Cast Carbon Steel Globe Valve

BS 1873 Design,
Bolted Bonnet, OS&Y,
Screwed-in Back seat,
Rising Stem and Handwheel,
Swivel Disc

Figure NO.:
GL15R,C00/5
GL15J,C00/5
GL15B,C00/5

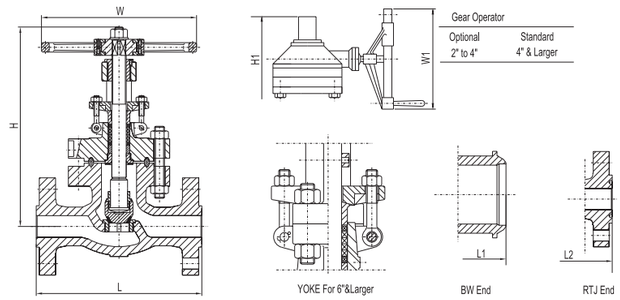

NPS	DN	L & L1(RF-BW)		L2(RTJ)		W		W1		H		H1		WT(RF)	WT(BW)
in	mm	in	mm	in	mm	in	mm	in	mm	in	mm	in	mm	kg	kg
2”	50	14.5	368	14.61	371	14	350	12	305	19	476	21	521	110	75
2.5”	65	16.5	419	16.61	422	14	350	-	-	21	532	-	-	138	112
3”	80	18.5	470	18.62	473	20	500	24	610	24	617	27	680	190	156
4”	100	21.5	546	21.61	549	22	560	24	610	30	755	33	847	390	260
5”	125	26.5	673	26.61	676	-	-	24	610	-	-	41	1042	571	450
6”	150	27.8	705	27.99	711	-	-	24	610	-	-	44	1117	895	783
8”	200	32.8	832	33.15	842	-	-	24	610	-	-	52	1330	1400	1194
10”	250	39	991	39.39	1000.5	-	-	39	1000	-	-	61	1554	2250	1765
12”	300	44.5	1130	45.12	1146	-	-	39	1000	-	-	64	1619	3095	2430

"(1) For valves larger than 12", Please contact Neway sales or engineering team for details.

Class 2500 Cast Carbon Steel Globe Valve

BS 1873 Design,
Bolted Bonnet, OS&Y,
Screwed-in Back seat,
Rising Stem and Handwheel,
Swivel Disc

Figure NO.:
GL25R,C00/5
GL25J,C00/5
GL25B,C00/5

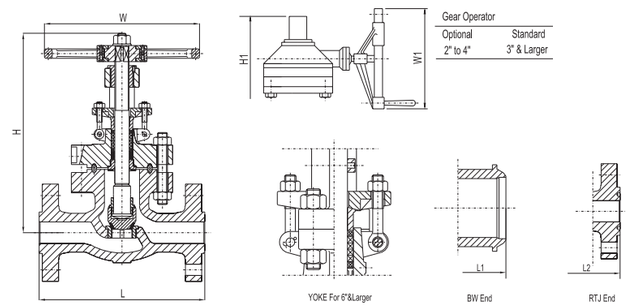

NPS	DN	L & L1(RF-BW)		L2(RTJ)		W		W1		H		H1		WT(RF)	WT(BW)
in	mm	in	mm	in	mm	in	mm	in	mm	in	mm	in	mm	kg	kg
2”	50	17.8	451	17.87	454	18	450	18	458	20	509	22	552	140	114
2.5”	65	20	508	20.24	514	18	450	18	458	21	533	26	650	264	214
3”	80	22.8	578	22.99	584	24	600	24	610	27	674	29	744	342	285
4”	100	26.5	673	26.89	683	24	600	24	610	32	806	35	886	540	440
6”	150	36	914	36.5	927	-	-	24	610	-	-	50	1265	1535	1400
8”	200	40.2	1022	40.87	1038	-	-	39	1000	-	-	56	1428	2570	2150
10”	250	50	1270	50.87	1292	-	-	47	1200	-	-	67	1705	3618	3030
12”	300	56	1423	56.89	1445	-	-	31	800	-	-	80	2039	4613	3690

"(1) For valves larger than 12", Please contact Neway sales or engineering team for details.

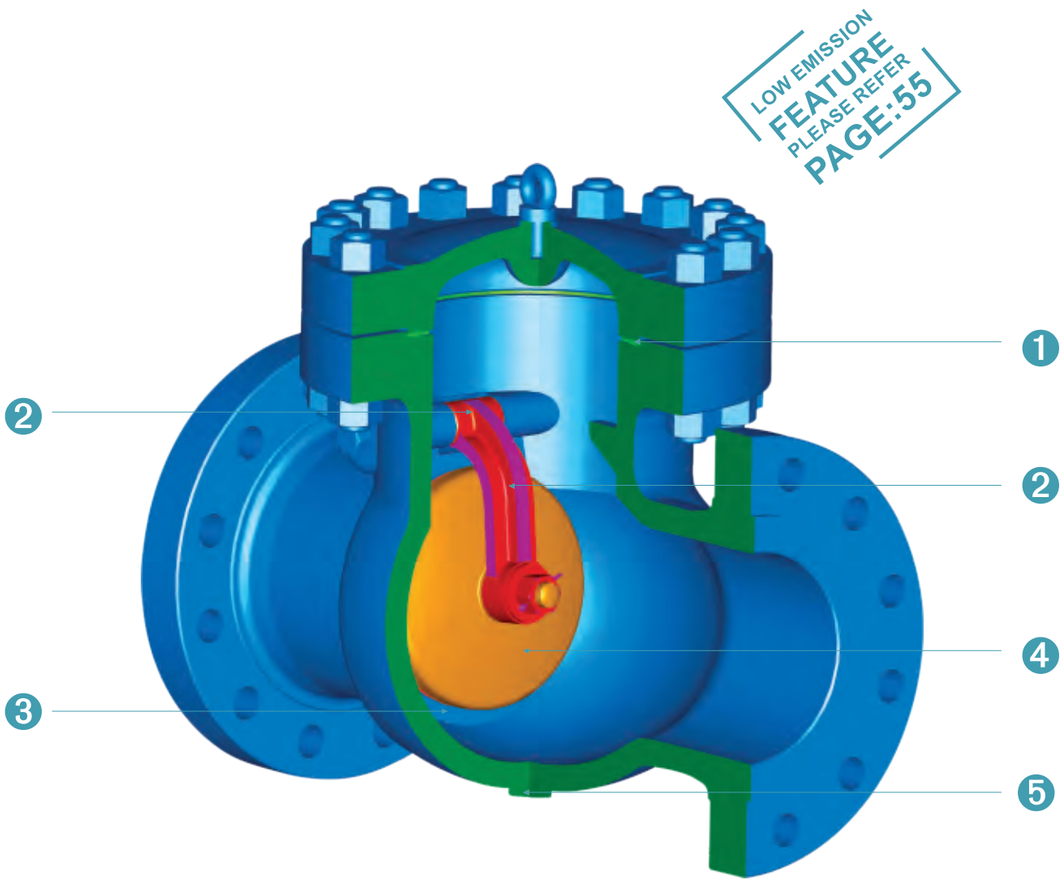

1. Flexible graphite gasket for Class 150 valves, spiral wound gasket for Class 300 & 600 valves, and ring joint for Class 900 & above valves or as an option for the Class 600 valves on customer request.

2. A hinge and hinge pin provided and mounted so as to permit full movement of the disc.

3. Standard renewable seal welded seat with stellite 6 while optional screwed-in seat.

4. Standard swing disc type, used in horizontal position for liquid service application or used in vertical position where liquid flow from botton to top.

5. Provision of standard bosses for a drain tapping at location G at the lower part of body centerline.Additional bosses conform to customer requirements.

NEWAY reserves the right to change design, materials or specifications without notice and free of obligation to furnish or install such changes on products previouly sold.

Part	Standard	Low Temperature Service	High Temperature Service	Stainless Steel	Sour Service
BODY	ASTM A216-WCB	ASTM A352-LCC	ASTM A217-WC9	ASTM A351-CF8M	ASTM A216-WCB
COVER	ASTM A216-WCB	ASTM A352-LCC	ASTM A217-WC9	ASTM A351-CF8M	ASTM A216-WCB
DISC	ASTM A217-CA15(4"&Smaller) &ASTM A216-WCB/ER410	ASTM A352/316 OVERLAY	ASTM A217-WC9/ STL.OVERLAY	ASTM A351-CF8M	ASTM A217-CA15-NC(4"&Smaller)&AST M A216-WCB/ER410-NC
HINGE	ASTM A216-WCB	ASTM A352-LCC	ASTM A217-WC9	ASTM A351-CF8M	ASTM A216-WCB
SEAT RING	ASTM A105/STL. OVERLAY	ASTM A182-F316/STL. OVERLAY	ASTM A182-F22/STL. OVERLAY	ASTM A182-F316/STL. OVERLAY	ASTM A105/STL. OVERLAY
HINGE PIN	ASTM A276-410	ASTM A276-316	ASTM A276-410	ASTM A276-316	ASTM A276-410-NC
PLUG FOR HINGE PIN	CARBON STEEL	ASTM A276-316	STAINLESS STEEL	ASTM A276-316	CARBON STEEL
WASHER	STAINLESS STEEL	ASTM A276-316	STAINLESS STEEL	ASTM A276-316	STAINLESS STEEL
DISC NUT	ASTM A276-420	ASTM A276-316	ASTM A276-420	ASTM A276-316	STAINLESS STEEL
DISC WASHER	ASTM A276-420	ASTM A276-316	ASTM A276-420	ASTM A276-316	STAINLESS STEEL
DISC SPLIT PIN	ASTM A276-420	ASTM A276-316	ASTM A276-420	ASTM A276-316	STAINLESS STEEL
BONNET RING JOINT	SOFT STEEL	ASTM A276-316	ASTM A276-304	ASTM A276-316	SOFT STEEL
BONNET STUD	ASTM A193-B7	ASTM A320-L7M	ASTM A193-B16	ASTM A193-B8 Class2	ASTM A193-B7M
BONNET NUT	ASTM A194-2H	ASTM A194-7M	ASTM A194-7	ASTM A194-8	ASTM A194-2HM
NAME PLATE	STAINLESS STEEL	STAINLESS STEEL	STAINLESS STEEL	STAINLESS STEEL	STAINLESS STEEL
HOOK SCREW	CARBON STEEL	CARBON STEEL	STAINLESS STEEL	CARBON STEEL	CARBON STEEL

NEWAY reserves the right to change design, materials or specifications without notice and free of obligation to furnish or install such changes on products previouly sold.

Class 150 Cast Carbon Steel Check Valve

BS 1868 Design,
Bolted Cover,
Swivel Type Disc

Figure NO.:
S1R,C00/8
S1B,C00/8

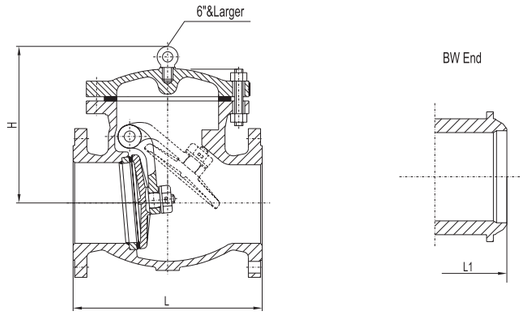

NPS	DN	L - L1(RF-BW)		H		WT(RF)	WT(BW)
in	mm	in	mm	in	mm	kg	kg
2”	50	8	203	6	147	15	10
2.5”	65	8.5	216	7	166	20	15.5
3”	80	9.5	241	7	174	25	21.2
3.5”	90	10.5	267	8	193	31	25
4”	100	11.5	292	8	198	41	32
5”	125	13	330	9	228	58	45
6”	150	14	356	12	297	75	64
8”	200	19.5	495	14	353	125	103
10”	250	24.5	622	15	391	268	189
12”	300	27.5	698	17	439	374	327
14”	350	31	787	19	480	495	423
16”	400	34	864	21	529	642	541
18”	450	38.5	978	23	586	784	696
20”	500	38.5	978	25	630	946	829
22”	550	42	1067	28	717	1155	980
24”	600	51	1295	29	746	1410	1276
26”	650	51	1295	32	806	1624	1250
28”	700	57	1448	38	968	1936	1680
30”	750	60	1524	38	969	2020	1945
32”	800	68	1727	40	1028	2965	2062
34”	850	77	1956	45	1150	3350	2740
36”	900	77	1956	49	1232	3738	3256
38”	950	85	2159	50	1276	4650	3810
40”	1000	85	2159	52	1320	5600	4600
42”	1050	89	2261	54	1378	5650	5246
44”	1100	90.2	2290	57	1450	6384	5250
46”	1150	91.3	2320	59	1510	7213	6000
48”	1200	92.5	2350	63	1593	9350	7650
50”	1250	93.7	2381	64	1637	9450	7750
52”	1300	95.7	2430	66	1680	9550	-
54”	1350	97.6	2480	68	1730	9650	-
56”	1400	101.6	2580	70	1780	9750	-
58”	1450	107.5	2730	72	1830	9850	-
60”	1500	110.2	2800	74	1880	9950	-

"(1) For valves larger than 60", Please contact Neway sales or engineering team for details.

Class 300 Cast Carbon Steel Check Valve

BS 1868 Design,
Bolted Cover,
Swivel Type Disc

Figure NO.:
S3R,C00/8
S3B,C00/8

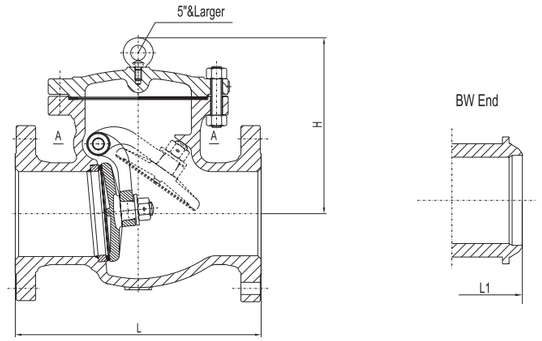

NPS	DN	L - L1(RF-BW)		H		WT(RF)	WT(BW)
in	mm	in	mm	in	mm	kg	kg
2”	50	10.5	267	6	158	22	14
2.5”	65	11.5	292	7	185	35	23
3”	80	12.5	318	8	194	38	30
4”	100	14	356	9	230	64	48
5”	125	15.7	400	12	298	82	60
6”	150	17.5	444	12	317	120	92
8”	200	21	533	15	380	230	170
10”	250	24.5	622	17	434	350	245
12”	300	28	711	20	505	495	360
14”	350	33	838	21	546	702	520
16”	400	34	864	23	594	882	565
18”	450	38.5	978	26	673	1102	850
20”	500	40	1016	29	728	1380	1004
22”	550	46.5	1180	31	793	1770	1430
24”	600	53	1346	34	858	2160	1842
26”	650	53	1346	39	999	2550	1995
28”	700	59	1499	42	1058	2960	2495
30”	750	62.8	1594	45	1140	3680	2780
32”	800	66.8	1697	47	1205	4525	3400
34”	850	70.9	1800	50	1269	5368	4025
36”	900	82	2083	52	1319	6280	5514
38”	950	86	2185	60	1535	6720	5040
40”	1000	96	2438	69	1750	7190	5390
42”	1050	103	2617	74	1870	7690	5750
44”	1100	104	2642	74	1880	8230	6170
46”	1150	104	2642	75	1900	8800	6600
48”	1200	105	2667	66	1675	9410	7050
50”	1250	104	2642	77	1945	10070	7550
52”	1300	106	2693	68	1720	10070	8030
54”	1350	114	2896	78	1990	11400	8550
56”	1400	121	3074	69	1765	12100	9050
58”	1450	120.1	3051	80	2035	12900	9670
60”	1500	137.9	3503	71	1810	13800	10350

"(1) For valves larger than 60", Please contact Neway sales or engineering team for details.

Class 600 Cast Carbon Steel Check Valve

BS 1868 Design,
Bolted Cover,
Swivel Type Disc

Figure NO.:
S6R,C00/8
S6B,C00/8

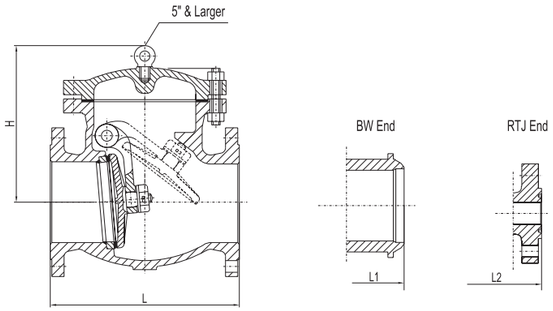

NPS	DN	L - L1(RF-BW)		L2(RTJ)		H		WT(RF)	WT(BW)
in	mm	in	mm	in	mm	in	mm	kg	kg
2”	50	11.5	292	11.61	295	7	187	30	23
2.5”	65	13	330	13.11	333	8	210	43	35
3”	80	14	356	14.13	359	9	232	56	43
4”	100	17	432	17.13	435	12	315	93	85
5”	125	20	508	20.12	511	14	355	96	82
6”	150	22	559	22.13	562	15	375	202	160
8”	200	26	660	26.1	663	17	427	339	233
10”	250	31	787	31.1	790	20	502	521	455
12”	300	33	838	33.11	841	22	570	875	616
14”	350	35	889	35.12	892	24	620	885	840
16”	400	39	991	39.13	994	28	723	1220	1030
18”	450	43	1092	43.11	1095	29	742	1620	1365
20”	500	47	1194	47.24	1200	32	817	2120	1888
22”	550	51	1295	51.38	1305	35	896	2685	2419
24”	600	55	1397	55.39	1407	38	974	3250	2950
26”	650	57	1448	57.52	1461	42	1075	4255	3619
28”	700	63	1600	63.5	1613	46	1165	5075	4360
30”	750	65	1651	65.51	1664	52	1324	5500	5338
32”	800	70	1778	70.63	1794	54	1375	7650	6500
34”	850	76	1930	76.61	1946	55	1408	7950	6760
36”	900	82	2083	82.64	2099	61	1542	9905	8895
38”	950	86	2185	86.65	2201	64	1622	10250	8700
40”	1000	90	2286	90.63	2302	67	1702	10600	9010
42”	1050	96	2438	96.61	2454	71	1800	10950	9308
44”	1100	97.3	2472	97.95	2488	77	1950	11300	9605
46”	1150	98.7	2506	99.29	2522	85	2150	11650	9903
48”	1200	100	2540	100.63	2556	85	2171	12000	10200
50”	1250	100	2540	100.63	2556	87	2200	12350	10498
52”	1300	102.5	2604	103.15	2620	89	2250	12700	10795
54”	1350	105	2668	105.67	2684	91	2300	13060	11101
56”	1400	107.6	2732	108.19	2748	93	2350	13430	11416
58”	1450	110.1	2796	110.71	2812	94	2400	13810	11739
60”	1500	112.6	2860	113.23	2876	96	2450	14200	12070

"(1) For valves larger than 60", Please contact Neway sales or engineering team for details.

Class 900 Cast Carbon Steel Check Valve

BS 1868 Design,
Bolted Cover,
Swivel Type Disc

Figure NO.:
S9R,C00/8
S9B,C00/8
S9J,C00/8

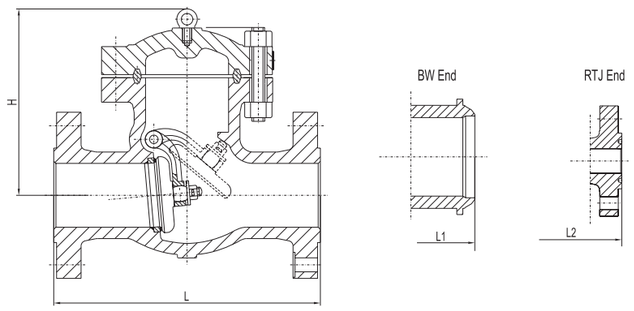

NPS	DN	L - L1(RF-BW)		L2(RTJ)		H		WT(RF)	WT(BW)
in	mm	in	mm	in	mm	in	mm	kg	kg
2”	50	14.5	368	14.61	371	11	290	70	60
2.5”	65	16.5	419	16.61	422	13	323	100	86
3”	80	15	381	15.12	384	12	314	91	80
4”	100	18	457	18.11	460	14	362	150	115
5”	125	22	559	22.13	562	16	400	218	163
6”	150	24	610	24.13	613	17	438	230	176
8”	200	29	737	29.13	740	20	499	387	297
10”	250	33	838	33.11	841	23	574	632	485
12”	300	38	965	38.11	968	25	639	901	691
14”	350	40.5	1029	40.87	1038	27	690	1139	874
16”	400	44.5	1130	44.88	1140	30	766	1613	1237
18”	450	48	1219	48.5	1232	34	851	2000	1534
20”	500	52	1321	52.48	1333	39	980	3500	2685
22”	550	56.5	1435	57.24	1454	42	1059	4350	3336
24”	600	61	1549	61.73	1568	45	1138	5200	3988
26”	650	62	1575	62.83	1596	44	1121	6600	5030
28”	700	70	1778	70.83	1799	54	1372	7920	6075
30”	750	74.5	1892	75.31	1913	60	1521	9504	7290
32”	800	78.9	2004	79.72	2025	66	1671	11405	8748
34”	850	81.7	2075	82.76	2102	69	1746	13686	10497
36”	900	87.9	2232	88.94	2259	72	1821	16423	12596

"(1) For valves larger than 36", Please contact Neway sales or engineering team for details.

Class 1500 Cast Carbon Steel Check Valve

BS 1868 Design,
Bolted Cover,
Swivel Type Disc

Figure NO.:
S15R,C00/8
S15B,C00/8
S15J,C00/8

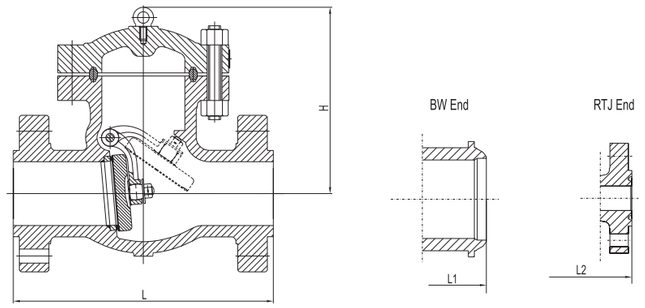

NPS	DN	L - L1(RF-BW)		L2(RTJ)		H		WT(RF)	WT(BW)
in	mm	in	mm	in	mm	in	mm	kg	kg
2”	50	14.5	368	14.61	371	11	290	70	56
2.5”	65	16.5	419	16.61	422	14	349	100	68
3”	80	18.5	470	18.62	493	13	338	150	75
4”	100	21.5	546	21.61	549	16	409	245	150
5”	125	26.5	673	26.61	676	18	465	400	278
6”	150	27.8	705	27.99	711	20	520	550	406
8”	200	32.8	832	33.15	842	24	611	1010	670
10”	250	39	991	39.37	1000	30	756	1550	1245
12”	300	44.5	1130	45.12	1146	32	807	2280	1639
14”	350	49.5	1257	50.24	1276	34	866	3060	2150
16”	400	54.5	1384	55.39	1407	39	978	4500	3140
18”	450	60.5	1537	61.38	1559	45	1147	5110	4220
20”	500	65.5	1664	66.38	1686	51	1284	6200	5430
22”	550	71	1804	72.13	1832	56	1410	7523	5266
24”	600	76.5	1943	77.64	1972	61	1539	9128	6390
26”	650	82	2083	83.11	2111	71	1794	11075	7753
28”	700	87.5	2222.5	88.62	2251	81	2049	13437	9406
30”	750	93	2362	94.09	2390	91	2304	16303	11412
32”	800	100	2540	101.1	2568	99	2514	19781	13847
34”	850	107.5	2730	108.58	2758	108	2743	24000	16800
36”	900	115.6	2935	116.65	2963	118	2993	29119	20383

"(1) For valves larger than 36", Please contact Neway sales or engineering team for details.

Class 2500 Cast Carbon Steel Check Valve

BS 1868 Design,
Bolted Cover,
Swivel Type Disc

Figure NO.:
S25R,C00/8
S25B,C00/8
S25J,C00/8

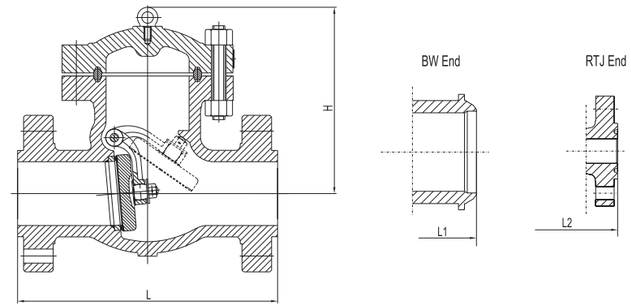

NPS	DN	L - L1(RF-BW)		L2(RTJ)		H		WT(RF)	WT(BW)
in	mm	in	mm	in	mm	in	mm	kg	kg
2”	50	17.8	451	17.87	454	13	328	145	102
2.5”	65	20	508	20.24	514	14	368	240	168
3”	80	22.8	578	22.99	584	16	408	330	231
4”	100	26.5	673	26.89	683	16	407	650	455
5”	125	31.3	794	31.77	807	19	495	1025	718
6”	150	36	914	36.5	927	23	582	1400	980
8”	200	40.2	1022	40.87	1038	29	725	2420	1694
10”	250	50	1270	50.87	1292	30	750	3750	2625
12”	300	56	1422	56.85	1444	32	825	5500	3850
14”	350	60	1524	60.87	1546	36	905	7150	5005
16”	400	68	1727	69.09	1755	39	1000	9250	6475
18”	450	74	1879	75.08	1907	43	1100	12000	8400
20”	500	80	2031	81.06	2059	48	1210	15500	10850
22”	550	85.9	2183	87.05	2211	52	1330	20000	14000
24”	600	91.9	2335	93.03	2363	57	1450	26000	18200

"(1) For valves larger than 24", Please contact Neway sales or engineering team for details.

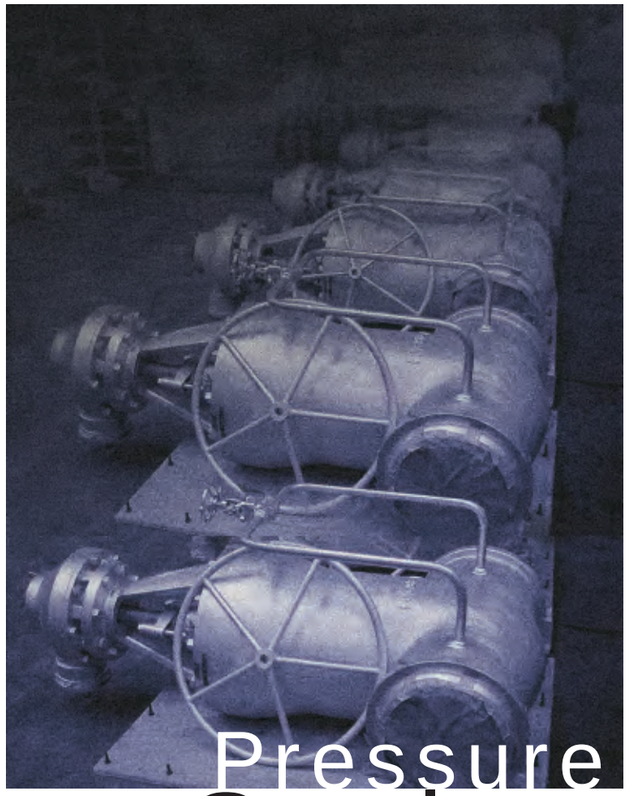

Pressure Seal Valve

Prolonged function and more compact valves characterized by light weight, small volume and less maintenance, specifically designed for the high temperature and the high pressure services encountered in nuclear and fossil fuel power plants.

Cast Alloy Steel A217 of Grade C12A

Neway has developed Gate,Globe & Check valves for high pressure and high temperature application in power plant

To cater for the tendency of increasing power plant temperature and pressure to improve efficiencies and meet other high temperature industries. Neway has successfully developed cast alloy steel A217 Gr. C12A, this alloy exhibits excellent high-temperature properties based on the formation of a particular microstructure containing submicroscopic carbides; the alloy is also much more resistant to thermal fatigue than the austenitic stainless steel because of its lower thermal expansion rating and higher thermal conductivity. Table 1 below shows the allowable stresses (MPa) for several ASTM materials widely used in high temperature industries, and the chemical composition of C12A is shown in table 2 below:

Table 1 Unit: Mpa

Temperature		Casting			Forgings		
°C	°F	WC9	C12	C12A	F22	F9	F91
38	100	138	177.2	146.9	147.6	167.5	167.5
260	500	133	169.6	133	141.3	160.7	166.2
343	650	131.7	164.8	126.9	139.3	155.8	161.3
482	900	109	113	111	108.9	113	131.7
538	1050	35.2	34.5	78.6	35.2	34.5	96.5
593	1100	22	22.8	60.7	22	22.8	71

Table 1: ASME boiler and pressure standard code section II allowable stresses.
Note: Alloy C12A or F91 provides much higher allowable stresses in temperature ranging from 482-593℃ (900-1100T)

Table 2

Grade	Basic element											
	C	Si	Mn	S	P	Cr	V	N	Nb	Mo	Ni	AL
ASTM A217 C12A	0.08-0.12	0.20-0.50	0.30-0.60	≤0.01	≤0.03	8.00-9.50	0.18-0.25	0.03-0.07	0.06-0.10	0.85-1.05	≤0.4	≤0.04

In order to create the special microstructure required to meet the high temperature properties as well as nomal ambient temperature conditions, a number of metallurgical processes must be properly executed; they include deoxidation, heat-treatment, proper welding process and PWHT(post welding heat treatment). Then, the special microstructure can be formed. Fig.1, 2 & 3 show the accepted microstructures:

Fiqure 1: Acceptable microstructure of castings (100X) [1]

Fiqure 1: Acceptable microstructure after welding (100X) [1]

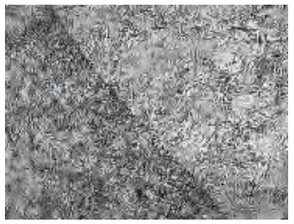

Fiqure 1: Acceptable microstructure in heat affected zone. (100X) [1]

In response to special requirements of steel types, longterm preparation and R&D have been made. The materials have been verified in all properties and qualified to fulfilll the application requirements.

1. Deoxidization

To remove free oxygen prior to pouring castings, a small quantity of deoxidizers materials, with a high affinity for oxygen, are added into the melted metal; they combine with the oxygen to form solid oxygen inclusion particles. The most common deoxidizers are manganese, silicon and aluminum. This is a critical process to ensure that an acceptable microstructure is obtained (see Fig 1) and we can achieve high temperature creep strength.

2. Heat treatment

This processing is also one of the key procedures to ensure the proper microstructure. In order to meet the high temperature properties, we perform strict heat treatment procedures; metal temperature,heating and cooling periods are critical in this process.

3. Welding & Post-weld heat treatment (PWHT)

To achieve the proper creep resistance and toughness for the high chrome alloy, we use special weld & PWHT procedures, which include pre-heating temperature control and welding filler materials, particular attention is given to PWHT. All processes are controlled precisely to allow the formation of martensite in the weld and heat affected zone (HAZ). Figure 2 & 3 show the acceptable microstructure in weld area and HAZ.

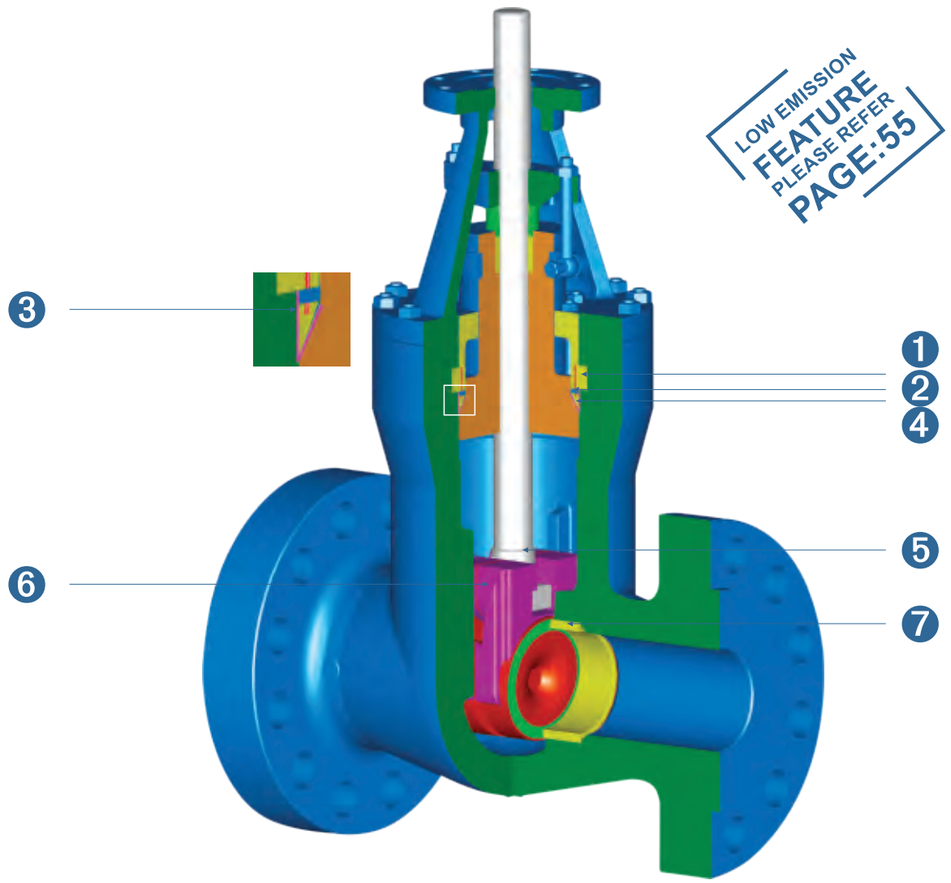

1. Separated rings absorb the thrust along the stem applied by the internal pressure.
2. Sealing rings are used to withstand pressure and prevent deformation of the gaskets.
3. Stainless steel inlay to ensure soundness and corrosion-resistance in the critical body sealing zone for carbon and alloy steel valves.
4. Mild steel gasket seal to provide large contact area for perfect sealing..
5. Blowout proof stem design features tapered sealing surface which contacts against bonnet backseat when the valve is fully open.
6. Flexible wedge can compensate for seat face distortion and body deformation due to pipe stress.
7. Seat ring with stellite 6 overlay is standard design and installed with seal weld.

NEWAY reserves the right to change design, materials or specifications without notice and free of obligation to furnish or install such changes on products previouly sold.

Part	Standard	Stainless Steel	High Temperature Service		
BODY	ASTM A216-WCB	ASTM A351-CF8M	ASTM A217-WC6	ASTM A217-WC9	ASTM A217-C12A
BONNET	ASTM A105	ASTM A182-F316	ASTM A182-F11	ASTM A182-F22	ASTM A217-C12A
WEDGE	ASTM A216-WCB/ER410&ASTM A217-CA15	ASTM A351-CF8M/STL. OVERLAY	ASTM A217-WC6/ER410& ASTM A217-CA15	ASTM A217-WC9/ER410& ASTM A217-CA15	ASTM A217-C12A/ER410
STEM NUT	ASTM A439 D-2	ASTM A439 D-2	ASTM A439 D-2	ASTM A439 D-2	ASTM A439 D-2
GLAND FLANGE	ASTM A216-WCB	ASTM A351-CF8	ASTM A216-WCB	ASTM A216-WCB	ASTM A216-WCB
HANDWHEEL	DUCTILE IRON	DUCTILE IRON	DUCTILE IRON	DUCTILE IRON	DUCTILE IRON
SEAT RING	ASTM A105/STL. OVERLAY	ASTM A182-F316/STL. OVERLAY	ASTM A182-F11/STL. OVERLAY	ASTM A182-F22/STL. OVERLAY	ASTM A182-F6a/STL. OVERLAY
STEM	ASTM A182-F6a	ASTM A182-F316	ASTM A182-F6a	ASTM A182-F6a	ASTM A182-F6a
BONNET SEAL RING	ASTM A182-F304(4"&Smaller GRAPHITE)	ASTM A182-F316L(4"&Smaller GRAPHITE)	ASTM A182-F304(4"&Smaller GRAPHITE)	ASTM A182-F304(4"&Smaller GRAPHITE)	ASTM A182-F304(4"&Smaller GRAPHITE)
GLAND	ASTM A276-420	ASTM A276-316	ASTM A276-420	ASTM A276-420	ASTM A276-420
RETAINING NUT FOR STEM NUT	CARBON STEEL	STAINLESS STEEL	CARBON STEEL	CARBON STEEL	CARBON STEEL
YOKE	ASTM A216-WCB	ASTM A351-CF8	ASTM A216-WCB& ASTM A217-WC6	ASTM A216-WCB& ASTM A217-WC6	ASTM A216-WCB
PACKING	GRAPHITE	GRAPHITE	GRAPHITE	GRAPHITE	GRAPHITE
BONNET SEPARATE RING	CARBON STEEL	ASTM A276-420	ANSI 4140	ANSI 4140	ANSI 4140
CLIPPING RING	ASTM A216-WCB	ASTM A351-CF8	ASTM A217-WC6	ASTM A217-WC6	ASTM A276-420
HANDWHEEL NUT	CARBON STEEL	STAINLESS STEEL	CARBON STEEL	CARBON STEEL	CARBON STEEL
BONNET STUD	ASTM A193-B7	ASTM A193-B8	ASTM A193-B16	ASTM A193-B16	ASTM A193-B16
BONNET NUT	ASTM A194-2H	ASTM A194-8	ASTM A194-4	ASTM A194-4	ASTM A194-4
YOKE STUD	ASTM A193-B7	ASTM A193-B8	ASTM A193-B16	ASTM A193-B16	ASTM A193-B16
YOKE NUT	ASTM A194-2H	ASTM A194-8	ASTM A194-4	ASTM A194-4	ASTM A194-4
GLAND EYE BOLT	ASTM A193-B7	ASTM A193-B8	ASTM A193-B16	ASTM A193-B16	ASTM A193-B16
GLAND NUT	ASTM A194-2H	ASTM A194-8	ASTM A194-4	ASTM A194-4	ASTM A194-4
BONNET THRUST RING	CARBON STEEL	ASTM A276-420	ANSI 4140	ANSI 4140	ANSI 4140
SUPPORTING COVER	ASTM A105	ASTM A276-420	AISII 4140	AISI 4140	ANSI 4140
CLIPPING RING BOLT	CARBON STEEL	STAINLESS STEEL	STAINLESS STEEL	STAINLESS STEEL	STAINLESS STEEL
NAME PLATE	STAINLESS STEEL	STAINLESS STEEL	STAINLESS STEEL	STAINLESS STEEL	STAINLESS STEEL

NEWAY reserves the right to change design, materials or specifications without notice and free of obligation to furnish or install such changes on products previouly sold.

Class 600 Cast Carbon Steel Gate Valve

ASME B16.34,
Pressure Seal, OS&Y, Rising Stem,
Non-rising Handwheel,
Flexible Wedge

Figure NO.:
GPS6R,C00/5
GPS6B,C00/5
GPS6J,C00/5

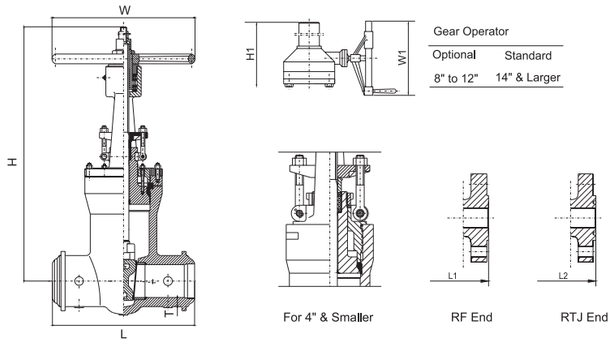

NPS	DN	L-L1(RF-BW)		L2(RTJ)		W		W1		H		H1		WT(RF)	WT(BW)
in	mm	in	mm	in	mm	in	mm	in	mm	in	mm	in	mm	kg	kg
2”	50	11.5	292	11.62	295	8	250	-	-	16	418	-	-	39	30
2.5”	65	13	330	13.12	333	10	250	-	-	19	476	-	-	52	35
3”	80	14	356	14.12	359	10	250	12	305	20	518	22	547	68	55
4”	100	17	432	17.12	435	14	350	12	305	25	646	27	696	115	88
5”	125	20	508	20.12	511	16	400	-	-	30	770	-	-	196	160
6”	150	22	559	22.12	562	18	450	12	305	33	839	36	917	270	204
8”	200	26	660	26.12	663	20	500	18	458	40	1024	42	1060	450	350
10”	250	31	787	31.12	790	24	600	18	458	48	1229	49	1256	700	586
12”	300	33	838	33.12	841	27	680	18	458	57	1450	58	1475	984	728
14”	350	35	889	35.12	892	-	-	24	610	-	-	62	1574	1245	1094
16”	400	39	991	39.12	994	-	-	24	610	-	-	71	1797	1750	1495
18”	450	43	1092	43.12	1095	-	-	24	610	-	-	76	1931	2175	1840
20”	500	47	1194	47.25	1200	-	-	24	610	-	-	87	2207	3080	2513
22”	550	50.98	1295	51.38	1305	-	-	24	610	-	-	97	2464	3897	3297
24”	600	55	1397	55.38	1407	-	-	24	610	-	-	102	2582	4450	3810
26”	650	57	1448	57.5	1461	-	-	32	810	-	-	124	3150	5370	4771
28”	700	61	1549	61.5	1562	-	-	39	1000	-	-	132	3362	6370	5660
30”	750	65	1651	65.5	1664	-	-	39	1000	-	-	140	3549	7200	6400
32”	800	70	1778	70.6	1794	-	-	39	1000	-	-	150	3811	8520	7700
34”	850	75.98	1930	76.61	1946	-	-	39	1000	-	-	144	3660	8030	7294
36”	900	82	2083	82.6	2099	-	-	39	1000	-	-	168	4260	11890	10800
38”	950	86.02	2185	86.65	2201	-	-	39	1000	-	-	178	4522	13674	12358
40”	1000	90	2286	90.63	2302	-	-	47	1200	-	-	184	4670	15724	14283
42”	1050	96	2438	96.61	2454	-	-	47	1200	-	-	194	4921	16305	15120
44”	1100	97.32	2472	97.95	2488	-	-	47	1200	-	-	204	5183	18750	16947
46”	1150	98.66	2506	99.29	2522	-	-	47	1200	-	-	214	5445	21563	19587
48”	1200	100	2540	100.63	2556	-	-	47	1200	-	-	231	5876	24798	22996
50”	1250	100	2540	100.63	2556	--	--	47	1200	-	-	240	6088	28517	25774
52”	1300	102.52	2604	103.15	2620	-	-	47	1200	-	-	247	6275	32795	29789
54”	1350	105.04	2668	105.67	2684	-	-	47	1200	-	-	257	6537	37714	34974
56”	1400	107.56	2732	108.19	2748	-	-	47	1200	-	-	251	6386	43371	39199
58”	1450	110.08	2796	110.71	2812	-	-	47	1200	-	-	275	6986	49877	45305
60”	1500	112.6	2860	113.23	2876	-	-	47	1200	-	-	285	7248	57359	53191

"(1) For valves larger than 60", Please contact Neway sales or engineering team for details.

Class 900 Cast Carbon Steel Gate Valve

ASME B16.34,
Pressure Seal, OS&Y, Rising Stem,
Non-rising Handwheel,
Flexible Wedge

Figure NO.:
GPS9R,C00/5
GPS9B,C00/5
GPS9J,C00/5

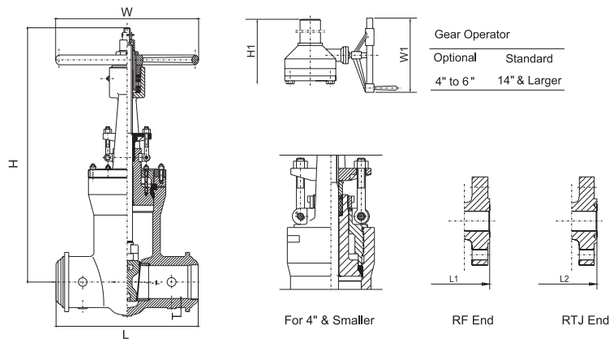

NPS	DN	L(BW)		L1(RF)		L2(RTJ)		W		W1		H		H1		WT(RF)	WT(BW)
in	mm	in	mm	in	mm	in	mm	in	mm	in	mm	in	mm	in	mm	kg	kg
2”	50	8.5	216	14.5	368	14.62	371	10	250	-	-	20	512	-	-	60	40
2.5”	65	10	254	16.5	419	16.62	422	12	300	-	-	24	602	-	-	99	67
3”	80	12.01	305	15	381	15.12	384	14	350	12	305	27	674	27	684	95	70
4”	100	14.02	356	18	457	18.12	460	16	400	12	305	29	742	31	790	142	106
5”	125	17.01	432	22	559	22.12	562	18	450	-	-	32	810	-	-	345	268
6”	150	20	508	24	610	24.12	613	20	500	18	460	35	878	43	1093	640	520
8”	200	25.98	660	29	737	29.12	740	24	600	18	460	51	1283	52	1321	1020	850
10”	250	30.98	787	33	838	33.12	841	-	-	24	610	-	-	60	1529	1490	1230
12”	300	35.98	914	38	965	38.12	968	-	-	24	610	-	-	68	1722	1785	1470
14”	350	39.02	991	40.5	1029	40.88	1038	-	-	24	610	-	-	78	1981	2750	2485
16”	400	42.99	1091	44.5	1130	44.88	1140	-	-	31	800	-	-	88	2231	3380	3000
18”	450	47.99	1219	48	1219	48.5	1232	-	-	31	800	-	-	97	2459	4884	3860
20”	500	52.01	1321	52	1321	52.48	1333	-	-	31	800	-	-	106	2698	6500	5665
22”	550	56.5	1435	56.5	1435	57.24	1454	-	-	39	1000	-	-	109	2779	9392	7733
24”	600	60.98	1549	61	1549	61.73	1568	-	-	39	1000	-	-	113	2879	12500	10292
26”	650	64.49	1638	65	1664	66.34	1685	-	-	39	1000	-	-	117	2965	18062	14871
28”	700	67.99	1727	70	1778	70.83	1799	-	-	39	1000	-	-	120	3054	24039	19792
30”	750	71.5	1816	74	1892	75.31	1913	-	-	47	1200	-	-	124	3146	34735	28598
32”	800	75	1905	78	2004	79.72	2025	-	-	47	1200	-	-	128	3240	46229	38062
34”	850	78.5	1994	83	2075	82.76	2102	-	-	47	1200	-	-	131	3337	66798	54997
36”	900	82.01	2083	87	2232	88.94	2259	-	-	47	1200	-	-	135	3437	88902	73196

"(1) For valves larger than 36", Please contact Neway sales or engineering team for details.

Class 1500 Cast Carbon Steel Gate Valve

ASME B16.34,
Pressure Seal, OS&Y, Rising Stem,
Non-rising Handwheel,
Flexible Wedge

Figure NO.:
GPS15R,C00/5
GPS15B,C00/5
GPS15J,C00/5

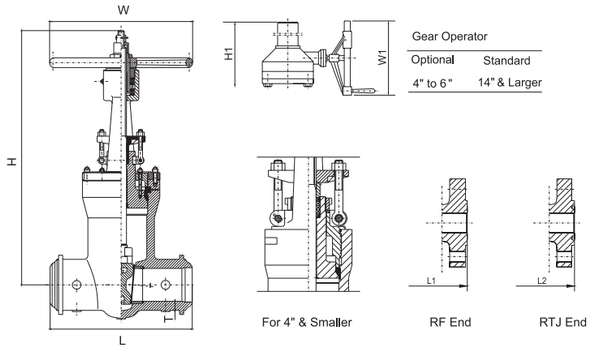

NPS	DN	L(BW)		L1(RF)		L2(RTJ)		W		W1		H		H1		WT(RF)	WT(BW)
in	mm	in	mm	in	mm	in	mm	in	mm	in	mm	in	mm	in	mm	kg	kg
2”	50	8.5	216	14.5	368	14.62	371	14	350	12	305	20	506	-	-	65	38
2.5”	65	10	254	16.5	419	16.62	422	12	300	-	-	23	594	-	-	99	80
3”	80	12.01	305	18.5	470	18.62	473	20	500	12	305	26	666	33	844	135	90
4”	100	15.98	406	21.5	546	21.62	549	22	550	18	458	30	768	33	827	205	150
5”	125	19.02	483	26.5	673	26.61	676	24	600	18	458	45	1155	51	1306	297	217
6”	150	22.01	559	27.75	705	28	711	24	600	18	458	45	1155	51	1306	475	400
8”	200	27.99	711	32.75	832	33.13	842	-	-	18	458	-	-	53	1344	865	705
10”	250	34.02	864	39	991	39.38	1000	-	-	18	458	-	-	65	1645	1530	1160
12”	300	39.02	991	44.5	1130	45.12	1146	-	-	24	610	-	-	73	1855	2356	1894
14”	350	42.01	1067	49.5	1257	50.25	1276	-	-	24	610	-	-	81	2050	2696	2360
16”	400	47.01	1194	54.5	1384	55.38	1407	-	-	24	610	-	-	90	2280	4050	3750
18”	450	52.99	1346	60.5	1537	61.4	1559	-	-	39	1000	-	-	91	2320	5184	4300
20”	500	57.99	1473	65.5	1664	66.4	1686	-	-	39	1000	-	-	105	2660	6586	5885
22”	550	62.01	1575	71	1804	72.1	1832	-	-	39	1000	-	-	117	2980	9550	8534
24”	600	65.98	1676	76.5	1943	77.6	1972	-	-	39	1000	-	-	130	3303	13848	12375
26”	650	70	1778	82	2083	83.1	2111	-	-	47	1200	-	-	143	3623	20080	17944
28”	700	73.98	1879	87.5	2223	88.6	2251	-	-	47	1200	-	-	155	3943	29116	26019
30”	750	77.99	1981	93	2362	94.1	2390	-	-	47	1200	-	-	168	4263	42218	37727
32”	800	81.97	2082	100	2540	101.1	2568	-	-	47	1200	-	-	180	4583	61216	54704
34”	850	85.98	2184	107.5	2730	108.6	2758	-	-	47	1200	-	-	193	4903	88763	79321
36”	900	89.96	2285	115.6	2935	116.7	2963	-	-	47	1200	-	-	206	5223	128706	115015

"(1) For valves larger than 36", Please contact Neway sales or engineering team for details.

Class 2500 Cast Carbon Steel Gate Valve

ASME B16.34,
Pressure Seal, OS&Y, Rising Stem,
Non-rising Handwheel,
Flexible Wedge

Figure NO.:
GPS25R,C00/5
GPS25B,C00/5
GPS25J,C00/5

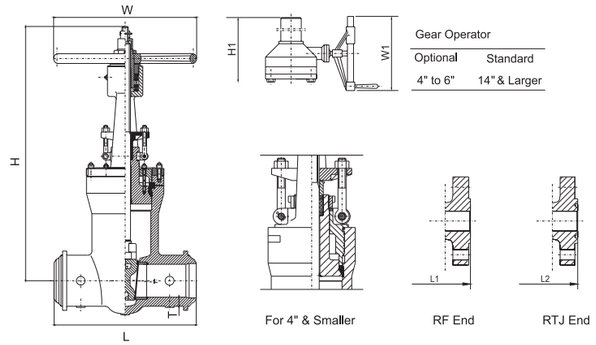

NPS	DN	L(BW)		L1(RF)		L2(RTJ)		W		W1		H		H1		WT(RF)	WT(BW)
in	mm	in	mm	in	mm	in	mm	in	mm	in	mm	in	mm	in	mm	kg	kg
2”	50	10.98	279	17.76	451	17.88	454	18	450	-	-	21	525	-	-	75	70
2.5”	65	12.99	330	20	508	20.25	514	16	400	-	-	23	596	-	-	98	80
3”	80	14.49	368	22.76	578	23	584	22	550	18	458	25	627	30	756	120	85
4”	100	17.99	457	26.5	673	26.88	683	26	650	18	458	29	729	34	870	220	180
5”	125	20.98	533	31.26	794	31.77	807	-	-	24	610	-	-	-	-	403	285
6”	150	24.02	610	35.98	914	36.5	927	-	-	18	458	-	-	44	1110	631	492
8”	200	30	762	40.24	1022	40.88	1038	-	-	28	710	-	-	55	1390	1046	850
10”	250	35.98	914	50	1270	50.88	1292	-	-	31	800	-	-	71	1798	2205	1815
12”	300	40.98	1041	55.98	1422	56.88	1445	-	-	32	810	-	-	74	1876	3495	2400
14”	350	44.02	1118	62.01	1575	62.87	1597	-	-	32	810	-	-	84	2126	4280	3360
16”	400	49.02	1245	67.99	1727	69.09	1755	-	-	32	810	-	-	90	2288	5241	4310
18”	450	55	1397	73.98	1879	75.08	1907	-	-	39	1000	-	-	116	2950	6418	5038
20”	500	60.98	1549	79.96	2031	81.06	2059	-	-	39	1000	-	-	129	3270	7859	6463
22”	550	64.49	1638	85.94	2183	87.05	2211	-	-	39	1000	-	-	141	3586	9623	7554
24”	600	67.99	1727	91.93	2335	93.03	2363	-	-	39	1000	-	-	154	3902	11783	9690

"(1) For valves larger than 24", Please contact Neway sales or engineering team for details.

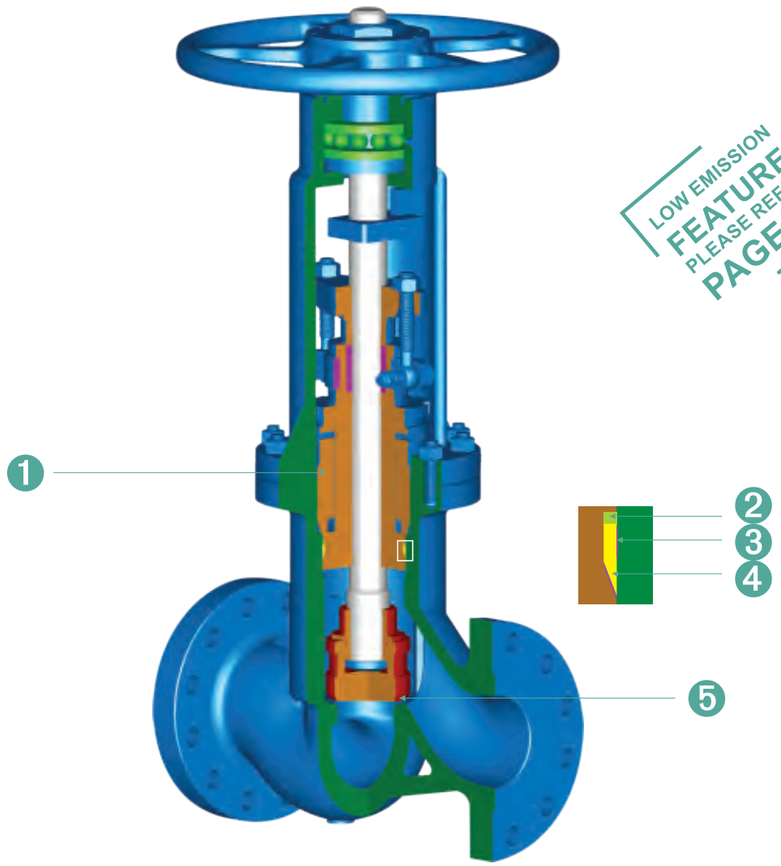

LOW EMISSION FEATURE PLEASE REFER PAGE:55

1. Separated rings absorb the thrust along the stem applied by the internal pressure.
2. Sealing rings are used to withstand pressure and prevent deformation of the gaskets.
3. Stainless steel inlay to ensure soundness and corrosion-resistance in the critical body sealing zone for carbon and alloy steel valves.
4. Mild steel gasket seal to provide large contact area for perfect sealing.
5. Seat ring with stellite 6 overlay is standard design and installed with seal weld.

Part	Standard	Stainless Steel	High Temperature Service		
BODY	ASTM A216-WCB/STL. OVERLAY	ASTM A351-CF8M/STL. OVERLAY	ASTM A217-WC6/STL. OVERLAY	ASTM A217-WC9/STL. OVERLAY	ASTM A217-C12A/STL. OVERLAY
BONNET	ASTM A105	ASTM A182-F316	ASTM A182-F11	ASTM A182-F22	ASTM A217-C12A
DISC	ASTM A182-F6a & ASTM A105/ER410	ASTM A182-F316	ASTM A182-F6a & ASTM A182-F11/ER410	ASTM A182-F6a & ASTM A182-F22/ER410	ASTM A182-F6a
STEM NUT	ASTM A439 D-2	ASTM A439 D-2	ASTM A439 D-2	ASTM A439 D-2	ASTM A439 D-2
GLAND FLANGE	ASTM A216-WCB	ASTM A351-CF8	ASTM A216-WCB	ASTM A216-WCB	ASTM A216-WCB
HANDWHEEL	DUCTILE IRON	DUCTILE IRON	DUCTILE IRON	DUCTILE IRON	DUCTILE IRON
BONNET SEAL RING	ASTM A182-F304(4"&Smaller GRAPHITE)	ASTM A182-F316L(4"&Smaller GRAPHITE)	ASTM A182-F304(4"&Smaller GRAPHITE)	ASTM A182-F304(4"&Smaller GRAPHITE)	ASTM A182-F304(4"&Smaller GRAPHITE)
STEM	ASTM A182-F6a	ASTM A182-F316	ASTM A182-F6a	ASTM A182-F6a	ASTM A182-F6a
RETAINING NUT FOR STEM NUT	CARBON STEEL	STAINLESS STEEL	CARBON STEEL	CARBON STEEL	CARBON STEEL
GLAND	ASTM A276-420	ASTM A182-316	ASTM A276-420	ASTM A276-420	ASTM A276-420
HANDWHEEL NUT	CARBON STEEL	STAINLESS STEEL	CARBON STEEL	CARBON STEEL	CARBON STEEL
DISC NUT	ASTM A276-420	ASTM A182-316	ASTM A276-420	ASTM A276-420	ASTM A276-420
STEAM WASHER	ASTM A276-430	N/A	ASTM A276-430	ASTM A276-430	ASTM A276-430
THRUST RING	CARBON STEEL	ASTM A276-420	ANSI 4140	ANSI 4140	ANSI 4140
PACKING	GRAPHITE	GRAPHITE	GRAPHITE	GRAPHITE	GRAPHITE
CLIPPING RING	ASTM A216-WCB	ASTM A351-CF8	ASTM A217-WC6	ASTM A217-WC6	ASTM A276-420
YOKE STUD	ASTM A193-B7	ASTM A193-B8	ASTM A193-B16	ASTM A193-B16	ASTM A193-B16
YOKE NUT	ASTM A194-2H	ASTM A194-8	ASTM A194-4	ASTM A194-4	ASTM A194-4
GLAND EYE BOLT	ASTM A193-B7	ASTM A193-B8	ASTM A193-B16	ASTM A193-B16	ASTM A193-B16
GLAND NUT	ASTM A194-2H	ASTM A194-8	ASTM A194-4	ASTM A194-4	ASTM A194-4
BONNET NUT 1	CARBON STEEL	ASTM A276-420	ANSI 4140	ANSI 4140	ANSI 4140
CLIPPING RING BOLT	CARBON STEEL	STAINLESS STEEL	STAINLESS STEEL	STAINLESS STEEL	STAINLESS STEEL
BONNET NUT 2	CARBON STEEL	ASTM A276-420	ANSI 4140	ANSI 4140	ANSI 4140
ORIENTED BLOCK	CARBON STEEL	ASTM A276-420	CARBON STEEL	CARBON STEEL	CARBON STEEL
YOKE	ASTM A216-WCB	ASTM A351-CF8	ASTM A216-WCB& ASTM A217-WC6	ASTM A216-WCB& ASTM A217-WC6	ASTM A217-C12A
NAME PLATE	STAINLESS STEEL	STAINLESS STEEL	STAINLESS STEEL	STAINLESS STEEL	STAINLESS STEEL

Notes: Above materials are general, when ordered, Please contact NEWAY Sales or technical team to confirm the details.

Class 600 Cast Carbon Steel Globe Valve

ASME B16.34,
Pressure Seal, OS&Y,
Rising Stem and Handwheel,
Swivel Disc

Figure NO.:
GLP6R,C00/5
GLP6B,C00/5
GLP6J,C00/5

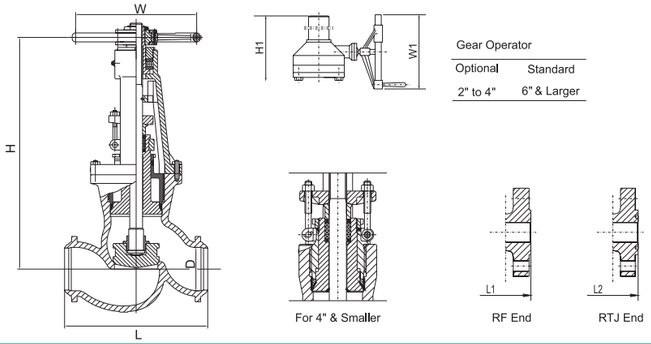

NPS	DN	L-L1(RF-BW)		L2(RTJ)		W		W1		H		H1		WT(RF)	WT(BW)
in	mm	in	mm	in	mm	in	mm	in	mm	in	mm	in	mm	kg	kg
2”	50	11.5	292	11.61	295	10	250	12	305	16	397	19	475	46	28
2.5”	65	13	330	13.11	333	12	300	-	-	18	456	-	-	55	42
3”	80	14	356	14.13	359	14	350	18	458	19	492	24	614	79	46
4”	100	17	432	17.13	435	18	450	12	305	24	598	25	626	99	76
5”	125	20	508	20.12	511	20	500	18	460	28	700	29	728	190	150
6”	150	22	559	22.13	562	18	458	18	458	39	990	33	829	336	320
8”	200	26	660	26.1	663	18	458	24	610	46	1166	41	1052	460	345
10”	250	31	787	31.1	790	28	700	24	610	44	1106	46	1173	690	518
12”	300	33	838	33.11	841	31	800	24	610	49	1236	55	1399	1035	776
14”	350	35	889	35.12	892	-	-	32	810	-	-	57	1454	1550	1160
16”	400	39	991	39.13	994	-	-	39	1000	-	-	61	1539	2325	1745
18”	450	43	1092	43.11	1095	-	-	47	1200	-	-	69	1764	3490	2618
20”	500	47	1194	47.24	1200	-	-	31	800	-	-	79	2000	5235	3926
24”	600	55.4	1407	55.79	1417	-	-	39	1000	-	-	90	2283	7850	5890

"(1) For valves larger than 24", Please contact Neway sales or engineering team for details.

Class 900 Cast Carbon Steel Globe Valve

ASME B16.34,
Pressure Seal, OS&Y,
Rising Stem and Handwheel,
Swivel Disc

Figure NO.:
GLP9R,C00/5
GLP9B,C00/5
GLP9J,C00/5

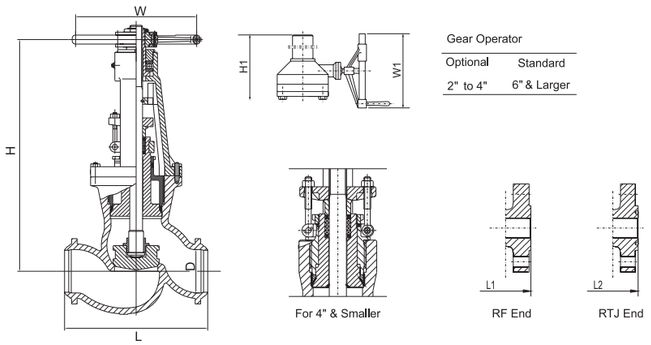

NPS	DN	L-L1(RF-BW)		L2(RTJ)		W		W1		H		H1		WT(RF)	WT(BW)
in	mm	in	mm	in	mm	in	mm	in	mm	in	mm	in	mm	kg	kg
2”	50	14.5	368	14.61	371	14	350	-	-	19	477	-	-	96	53
2.5”	65	16.5	419	16.61	422	14	350	-	-	20	504	-	-	110	74
3”	80	15	381	15.12	384	18	450	18	460	23	581	26	648	120	90
4”	100	18	457	18.11	460	20	500	18	458	28	708	32	820	165	145
5”	125	22	559	22.13	562	24	600	24	610	36	905	34	856	245	235
6”	150	24	610	24.13	613	24	600	24	610	43	1083	44	1112	330	330
8”	200	29	737	29.13	740	-	-	24	610	-	-	53	1342	934	819
10”	250	33	838	33.11	841	-	-	24	610	-	-	57	1456	1285	1120
12”	300	38	965	38.11	968	-	-	39	1000	-	-	66	1688	1747	1625
14”	350	40.5	1029	40.91	1039	-	-	47	1200	-	-	69	1755	2500	2300
16”	400	44.5	1130	44.88	1140	-	-	47	1200	-	-	82	2094	2633	2520

"(1) For valves larger than 16", Please contact Neway sales or engineering team for details.

Class 1500 Cast Carbon Steel Globe Valve

ASME B16.34,
Pressure Seal, OS&Y,
Rising Stem and Handwheel,
Swivel Disc

Figure NO.:
GLP15R,C00/5
GLP15B,C00/5
GLP15J,C00/5

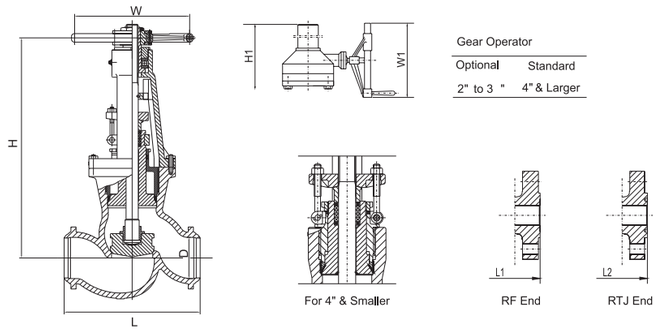

NPS	DN	L-L1(RF-BW)		L2(RTJ)		W		W1		H		H1		WT(RF)	WT(BW)
in	mm	in	mm	in	mm	in	mm	in	mm	in	mm	in	mm	kg	kg
2”	50	14.5	368	14.61	371	14	350	12	305	19	477	22	561	84	54
2.5”	65	16.5	419	16.61	422	14	350	24	610	22	569	27	681	116	97
3”	80	18.5	470	18.62	473	20	500	24	610	24	612	29	747	184	152
4”	100	21.5	546	21.61	549	22	560	24	610	31	782	35	883	303	285
6”	150	27.8	705	27.99	711	-	-	24	610	-	-	52	1316	825	680
8”	200	32.8	832	33.15	842	-	-	24	610	-	-	54	1369	1189	1008
10”	250	39	991	39.37	1000	-	-	28	710	-	-	64	1623	1936	1624
12”	300	44.5	1130	45.12	1146	-	-	39	1000	-	-	68	1724	3400	2830
14”	350	49.5	1257	50.24	1276	-	-	47	1200	-	-	81	2070	5800	4640

"(1) For valves larger than 14", Please contact Neway sales or engineering team for details.

Class 2500 Cast Carbon Steel Globe Valve

ASME B16.34,
Pressure Seal, OS&Y,
Rising Stem and Handwheel,
Swivel Disc

Figure NO.:
GLP25R,C00/5
GLP25B,C00/5
GLP25J,C00/5

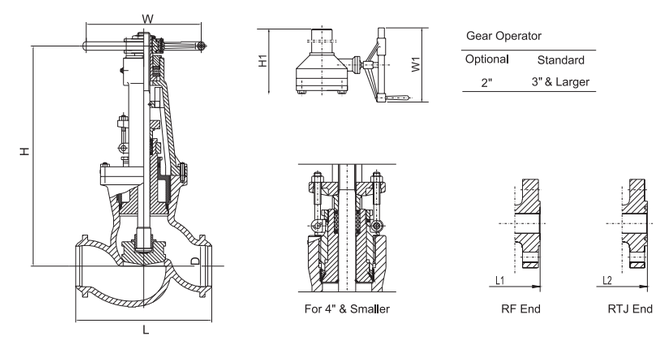

NPS	DN	L-L1(RF-BW)		L2(RTJ)		W		W1		H		H1		WT(RF)	WT(BW)
in	mm	in	mm	in	mm	in	mm	in	mm	in	mm	in	mm	kg	kg
2”	50	17.8	451	17.87	454	18	450	12	305	24	600	27	683	115	92
2.5”	65	20	508	20.24	514	18	450	24	610	29	748	29	734	132	115
3”	80	22.8	578	23.03	585	20	500	24	610	31	785	29	747	189	154
4”	100	26.5	673	26.89	683	22	560	24	610	44	1109	37	929	384	340
5”	125	31.3	794	22.13	807	-	-	24	610	-	-	34	1438	710	610
6”	150	36	914	36.5	927	-	-	24	610	-	-	56	1420	1071	960
8”	200	40.2	1022	40.87	1038	-	-	39	1000	-	-	67	1700	2003	1625
10”	250	50	1270	50.87	1292	-	-	31	800	-	-	72	1840	3260	2235
12”	300	56	1422	56.89	1445	-	-	39	1000	-	-	106	2692	5310	4250

"(1) For valves larger than 14", Please contact Neway sales or engineering team for details.

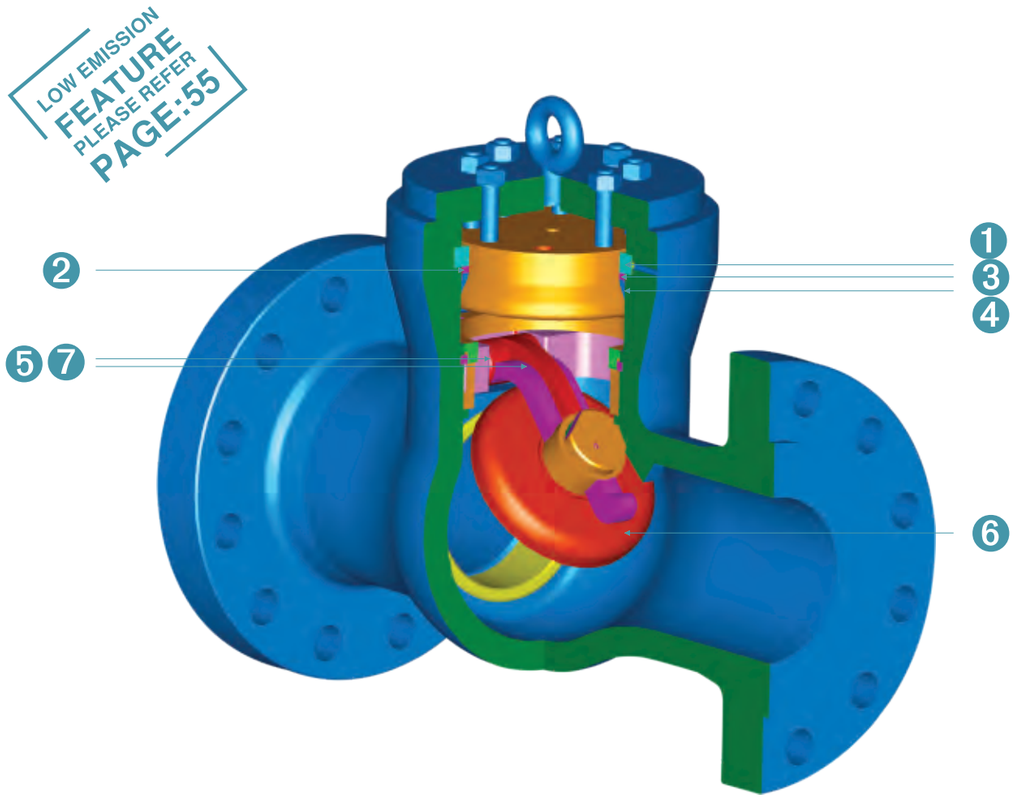

1. Separated rings absorb the thrust along the stem applied by the internal pressure.
2. Sealing rings are used to withstand pressure and prevent deformation of the gaskets.
3. Mild steel gasket seal to provide a large seal contact area for perfect sealing.
4. Stainless steel inlay to ensure soundness and corrosion-resistance in the critical body sealing zone for carbon and alloy steel valves.
5. Hinge pin design ensuring no pressure boundary intrusion.
6. Standard swing disc type to be used in horizontal position for liquid service applications or used in vertical position where liquid flow from botton to top.
7. Hinge and hinge pin design to permit full movement of the disc.

Part	Standard	Stainless Steel	High Temperature Service		
BODY	ASTM A216-WCB	ASTM A351-CF8M	ASTM A217-WC6	ASTM A217-WC9	ASTM A217-C12A
COVER	ASTM A216-WCB(4"&Smaller ASTM A 105)	ASTM A182-CF8M(4"&Smaller ASTM A182-F316)	ASTM A217-WC6(4"&Smaller ASTM A182-F11)	ASTM A217-WC9(4"&Smaller ASTM A182-F22)	ASTM A217-C12A(4"&Smaller ASTM A182-F91)
DISC	ASTM A217-CA15 & ASTM A216-WCB/ ER410	ASTM A351-CF8M/STL. OVERLAY	ASTM A217-CA15 & ASTM A217-WC6/ ER410	ASTM A217-CA15 & ASTM A217-WC9/ ER410	ASTM A217-CA15
HINGE	ASTM A105	ASTM A351-CF8M	ASTM A217-WC6	ASTM A217-WC9	ASTM A217-C12A
HINGE PIN	ASTM A182-F6a	ASTM A276-316	ASTM A182-F6a	ASTM A182-F6a	ASTM A182-F6a
DISC NUT	ASTM A276-420	ASTM A276-316	ASTM A276-420	ASTM A276-420	ASTM A276-420
BONNET SEAL RING	ASTM A182-F304(4"&Smaller GRAPHITE)	ASTM A182-F316L(4"&Smaller GRAPHITE)	ASTM A182-F304(4"&Smaller GRAPHITE)	ASTM A182-F304(4"&Smaller GRAPHITE)	ASTM A182-F304(4"&Smaller GRAPHITE)
HOOK SCREW	CARBON STEEL	STAINLESS STEEL	CARBON STEEL	CARBON STEEL	CARBON STEEL
COVER STUD	ASTM A193-B7	ASTM A193-B8	ASTM A193-B16	ASTM A193-B16	ASTM A193-B16
COVER NUT	ASTM A194-2H	ASTM A194-8	ASTM A194-4	ASTM A194-4	ASTM A194-4
SEAT RING	ASTM A105/STL. OVERLAY	ASTM A182-F316/STL. OVERLAY	ASTM A182-F11/STL. OVERLAY	ASTM A182-F22/STL. OVERLAY	ASTM A182-F6a/STL. OVERLAY
SEPARATE RING COVER	CARBON STEEL	ASTM A276-420	ANSI 4140	ANSI 4140	ANSI 4140
THRUST RING COVER	CARBON STEEL	ASTM A276-420	ANSI 4140	ANSI 4140	ANSI 4140
SUPPORTING COVER	ASTM A105	ASTM A276-420	ANSI 4140	ANSI 4140	ANSI 4140
STOP RING	ASTM A276-420	ASTM A276-316	ASTM A276-420	ASTM A276-420	ASTM A276-420
YOKE	ASTM A216-WCB	ASTM A276-316	ASTM A216-WCB& ASTM A217-WC6	ASTM A216-WCB& ASTM A217-WC6	ASTM A217-C12A
SEPARATE RING FOR STOP RING	ASTM A276-420	ASTM A276-316	ASTM A276-420	ASTM A276-420	ASTM A276-420
SPLIT PIN	STAINLESS STEEL	STAINLESS STEEL	STAINLESS STEEL	STAINLESS STEEL	STAINLESS STEEL
STOP RING SCREW	STAINLESS STEEL	STAINLESS STEEL	STAINLESS STEEL	STAINLESS STEEL	STAINLESS STEEL
NAME PLATE	STAINLESS STEEL	STAINLESS STEEL	STAINLESS STEEL	STAINLESS STEEL	STAINLESS STEEL

Notes: Above materials are general, when ordered, Please contact NEWAY Sales or technical team to confirm the details.

Class 600 Cast Carbon Steel Check Valve

ASME B16.34,

Pressure Seal Swing Disc Type

Figure NO.:

SPS6R,C00/5

SPS6B,C00/5

SPS6J,C00/5

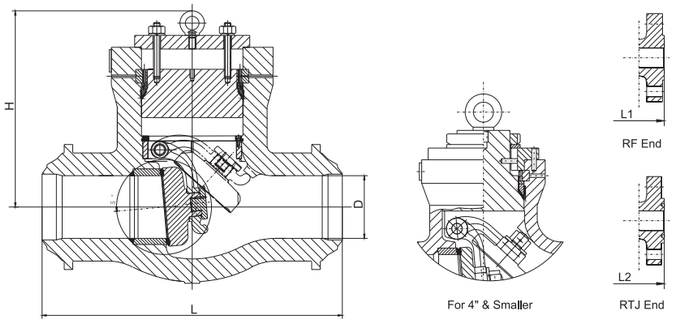

NPS	DN	L - L1(RF-BW)		L2(RTJ)		H		WT(RF)	WT(BW)
in	mm	in	mm	in	mm	in	mm	kg	kg
2”	50	11.5	292	11.61	295	9	241	31	25
2.5”	65	13	330	13.11	333	10	264	50	42
3”	80	14	356	14.13	359	11	270	61	49
4”	100	17	432	17.13	435	13	318	85	76
5”	125	20	508	20.12	511	16	400	135	85
6”	150	22	559	22.13	562	16	400	190	130
8”	200	26	660	26.1	663	23	587	350	260
10”	250	31	787	31.1	790	24	606	500	370
12”	300	33	838	33.11	841	27	695	682	568
14”	350	35	889	35.12	892	29	749	880	660
16”	400	39	991	39.13	994	29	730	1150	850
18”	450	43	1092	43.11	1095	29	819	1727	1344
20”	500	47	1194	47.24	1200	32	769	2260	1759
22”	550	51	1295	51.38	1305	30	949	2862	2228
24”	600	55	1397	55.39	1407	37	1000	4046	3556
26”	650	57	1448	57.52	1461	39	1099	4536	3531
28”	700	63	1600	63.5	1613	43	1200	5410	4212
30”	750	65	1651	65.51	1664	47	1180	5863	4564
32”	800	70	1778	70.63	1794	46	1208	8155	6349
34”	850	76	1930	76.61	1946	48	1323	8475	6598
36”	900	82	2083	82.64	2099	52	1392	10559	8220
38”	950	86	2185	86.65	2201	55	1460	10927	8507
40”	1000	90	2286	90.63	2302	57	1544	11300	8797
42”	1050	96	2438	96.61	2454	61	1673	11673	9087
44”	1100	97.3	2472	97.95	2488	66	1845	12046	9378
46”	1150	98.7	2506	99.29	2522	73	1863	12419	9668
48”	1200	100	2540	100.63	2556	73	1888	12792	9959
50”	1250	100	2540	100.63	2556	74	1931	13165	10249
52”	1300	102.5	2604	103.15	2620	76	1973	13538	10539
54”	1350	105	2668	105.67	2684	78	2016	13922	10838
56”	1400	107.6	2732	108.19	2748	79	2059	14316	11145
58”	1450	110.1	2796	110.71	2812	81	2102	14721	11460
60”	1500	112.6	2860	113.23	2876	83		15137	11784

"(1) For valves larger than 60", Please contact Neway sales or engineering team for details.

NEWAY reserves the right to change design, materials or specifications without notice and free of obligation to furnish or install such changes on products previouly sold.

Class 900 Cast Carbon Steel Check Valve

ASME B16.34,

Pressure Seal Swing Disc Type

Figure NO.:

SPS9R,C00/5

SPS9B,C00/5

SPS9J,C00/5

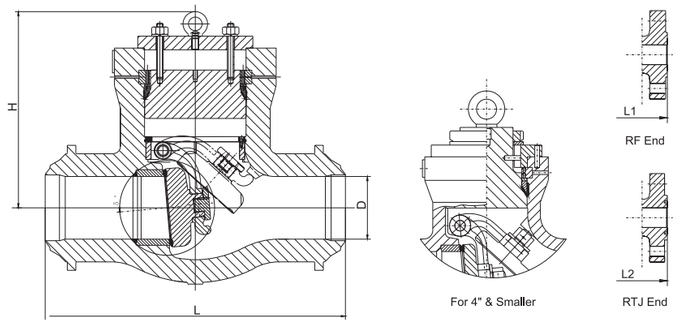

NPS	DN	L (BW)		L1 (RF)		L2 (RTJ)		H		WT(RF)	WT(BW)
in	mm	in	mm	in	mm	in	mm	in	mm	kg	kg
2”	50	8.5	216	14.5	368	14.61	371	9	241	42	22
2.5”	65	10	254	16.5	419	16.61	422	10	264	55	32
3”	80	12	305	15	381	15.12	384	11	270	61	45
4”	100	14	356	18	457	18.11	460	13	318	110	75
5”	125	17	432	22	559	22.13	562	14	359	180	131
6”	150	20	508	24	610	24.13	613	16	400	250	148
8”	200	26	660	29	737	29.13	740	23	587	450	312
10”	250	31	787	33	838	33.11	841	24	606	825	725
12”	300	36	914	38	965	38.11	968	27	695	995	875
14”	350	39	991	40.5	1029	40.87	1038	29	749	1628	1281
16”	400	43	1092	44.5	1130	44.88	1140	29	730	1733	1418
18”	450	48	1219	48	1219	48.5	1232	34	851	2300	1850
20”	500	52	1321	52	1321	52.48	1333	34	864	2975	2172
22”	550	56.5	1435	56.5	1435	57.24	1454	36	910	3698	2700
24”	600	61	1549	61	1549	61.73	1568	38	959	4420	3227
26”	650	64.5	1638	62	1575	62.83	1596	39	1000	5610	4095
28”	700	68	1727	70	1778	70.83	1799	45	1149	6732	4914
30”	750	71.5	1816	74.5	1892	75.31	1913	55	1400	8078	5897
32”	800	75	1905	78.9	2004	79.72	2025	60	1512	9694	7077
34”	850	78.5	1994	81.7	2075	82.76	2102	64	1633	11633	8492
36”	900	82	2083	87.9	2232	88.94	2259	69	1764	13960	10191

"(1) For valves larger than 36", Please contact Neway sales or engineering team for details.

NEWAY reserves the right to change design, materials or specifications without notice and free of obligation to furnish or install such changes on products previouly sold.

Class 1500 Cast Carbon Steel Check Valve

ASME B16.34,

Pressure Seal Swing Disc Type

Figure NO.:

SPS15R,C00/5

SPS15B,C00/5

SPS15J,C00/5

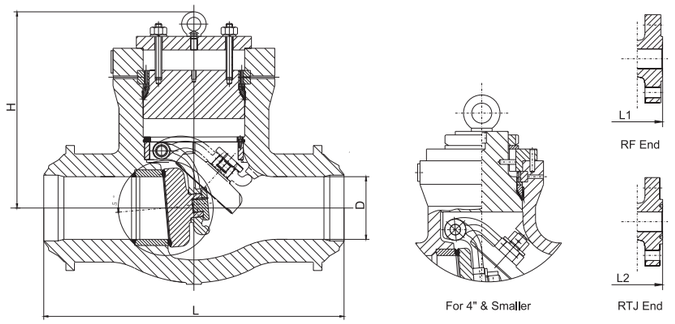

NPS	DN	L (BW)		L1 (RF)		L2 (RTJ)		H		WT(RF)	WT(BW)
in	mm	in	mm	in	mm	in	mm	in	mm	kg	kg
2”	50	8.5	216	14.5	368	14.61	371	9	241	30	20
2.5”	65	10	254	16.5	419	16.61	422	10	264	58	34
3”	80	12	305	18.5	470	18.62	473	11	274	62	50
4”	100	16	406	21.5	546	21.61	549	13	318	113	94
5”	125	19	483	26.5	673	26.61	676	15	388	224	176
6”	150	22	559	27.8	705	27.99	711	17	422	345	270
8”	200	28	711	32.8	832	33.15	842	19	479	551	454
10”	250	34	864	39	991	39.37	1000	23	591	858	695
12”	300	39	991	44.5	1130	45.12	1146	25	645	1628	1155
14”	350	42	1067	49.5	1257	50.24	1276	28	711	1811	1475
16”	400	47	1194	54.5	1384	55.39	1407	29	749	2539	2110
18”	450	60.5	1537	60.5	1537	61.38	1559	35	880	3306	3266
20”	500	65.5	1664	65.5	1664	66.38	1686	42	1070	3472	2730
22”	550	71	1804	71	1804	72.13	1832	46	1175	4213	3313
24”	600	76.5	1943	76.5	1943	77.64	1972	51	1283	5112	4020
26”	650	82	2083	82	2083	83.11	2111	59	1495	6202	4877
28”	700	87.5	2223	87.5	2223	88.62	2251	67	1708	7525	5918
30”	750	93	2362	93	2362	94.09	2390	76	1920	9130	7180
32”	800	100	2540	100	2540	101.1	2568	82	2095	11077	8711
34”	850	107.5	2730	107.5	2730	108.58	2758	90	2286	13440	10570
36”	900	115.6	2935	115.6	2935	116.65	2963	98	2494	16307	12824

"(1) For valves larger than 36", Please contact Neway sales or engineering team for details.

Class 2500 Cast Carbon Steel Check Valve

ASME B16.34,

Pressure Seal Swing Disc Type

Figure NO.:

SPS25R,C00/5

SPS25B,C00/5

SPS25J,C00/5

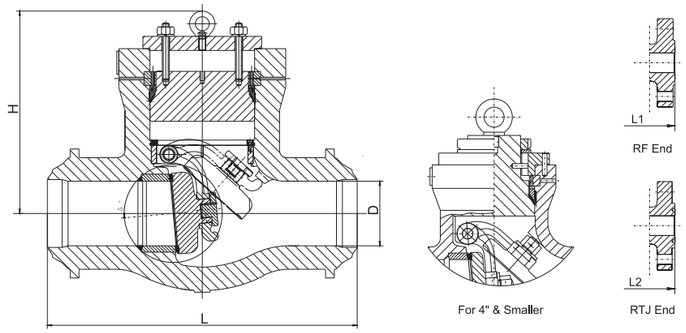

NPS	DN	L (BW)		L1 (RF)		L2 (RTJ)		H		WT(RF)	WT(BW)
in	mm	in	mm	in	mm	in	mm	in	mm	kg	kg
2”	50	11	279	17.8	451	17.87	454	10	245	74	30
2.5”	65	13	330	20	508	20.24	514	10	264	124	74
3”	80	14.5	368	22.8	578	22.99	584	11	270	156	89
4”	100	18	457	26.5	673	26.89	683	13	318	299	142
5”	125	21	533	31.3	794	31.77	807	15	385	368	220
6”	150	24	610	36	914	36.5	927	18	451	437	298
8”	200	30	762	40.2	1022	40.87	1038	22	559	736	540
10”	250	36	914	50	1270	50.87	1292	23	576	1718	820
12”	300	41	1041	56	1422	56.85	1444	26	656	2700	1480
14”	350	44	1118	60	1524	60.87	1546	34	860	3350	2450
16”	400	49	1245	68	1727	69.09	1755	35	899	4070	2930
18”	450	55	1397	74	1879	75.08	1907	39	1000	5280	3802
20”	500	61	1549	80	2031	81.06	2059	45	1149	6820	4910
22”	550	64.5	1638	85.9	2183	87.05	2211	50	1260	8800	6336
24”	600	68	1727	91.9	2335	93.03	2363	55	1400	11440	8237

"(1) For valves larger than 24", Please contact Neway sales or engineering team for details.

Gate Valve

Class	Size	2”					2-1/2”					3”					4”					5”					6”				
Class 150	Pressure Rating	0.6MPa	1MPa	1.5MPa	2MPa	-	0.6MPa	1MPa	1.5MPa	2MPa	-	0.6MPa	1MPa	1.5MPa	2MPa	-	0.6MPa	1MPa	1.5MPa	2MPa	-	0.6MPa	1MPa	1.5MPa	2MPa	-	0.6MPa	1MPa	1.5MPa	2MPa	-
	Number of Tums			14					18					20					22					22					33		
	Thrust (KN)	7.3	7.8	8.4	9.0	-	8.1	8.7	9.3	10.0	-	9.6	10.3	11.2	12.0	-	12.1	13.0	14.2	15.3	-	13.5	14.5	15.6	16.7	-	18.3	19.7	21.4	23.2	-
	Torque (N*M)	14.1	15.0	16.1	17.3	-	15.6	16.6	17.9	19.3	-	20.8	22.3	24.1	26.0	-	30.3	32.5	35.4	38.3	-	37.0	39.5	42.6	45.7	-	49.8	53.0	58.7	63.5	-
Class 300	Pressure Rating	1MPa	2MPa	3MPa	4MPa	5.1MPa	1MPa	2MPa	3MPa	4MPa	5.1MPa	1MPa	2MPa	3MPa	4MPa	5.1MPa	1MPa	2MPa	3MPa	4MPa	5.1MPa	1MPa	2MPa	3MPa	4MPa	5.1MPa	1MPa	2MPa	3MPa	4MPa	5.1MPa
	Number of Tums			14					18					20					22					28					33		
	Thrust (KN)	7.8	9.0	10.2	11.3	12.6	8.7	10.0	11.4	12.8	14.3	10.3	12.0	13.7	15.4	17.3	13.0	15.3	17.6	20.0	24.1	17.9	20.9	24.1	29.7	35.8	20.3	23.9	30.9	38.5	46.9
	Torque (N*M)	15.0	17.3	19.5	21.8	24.3	16.6	19.3	21.9	25.4	27.4	22.3	26.0	29.6	33.2	37.3	32.5	38.3	44.0	50.0	60.1	48.9	57.3	66.0	81.1	97.9	60.3	71.1	91.8	114.5	139.5
Class 600	Pressure Rating	3MPa	5MPa	6.5MPa	8MPa	10.2MPa	3MPa	5MPa	6.5MPa	8MPa	10.2MPa	3MPa	5MPa	6.5MPa	8MPa	10.2MPa	3MPa	5MPa	6.5MPa	8MPa	10.2MPa	3MPa	5MPa	6.5MPa	8MPa	10.2MPa	3MPa	5MPa	6.5MPa	8MPa	10.2MPa
	Number of Tums			14					18					17					23					22					26		
	Thrust (KN)	12.2	14.2	16.3	18.0	20.6	13.4	16.2	18.2	20.3	23.3	16.9	20.5	23.4	26.9	32.2	24.1	30.6	36.5	42.3	50.8	31.1	42.9	51.8	60.6	73.6	36.0	49.8	60.2	70.5	85.7
	Torque (N*M)	23.4	27.9	31.3	34.6	39.6	25.7	31.0	35.0	38.9	44.7	42.4	51.3	58.3	67.3	80.4	66.1	83.8	99.7	115.7	139.1	104.5	144.2	173.9	203.6	247.2	129.5	179.2	215.9	253.9	308.6
Class 900	Pressure Rating	5MPa	8MPa	10MPa	13MPa	15.3MPa	5MPa	8MPa	10MPa	13MPa	15.3MPa	5MPa	8MPa	10MPa	13MPa	15.3MPa	5MPa	8MPa	10MPa	13MPa	15.3MPa	5MPa	8MPa	10MPa	13MPa	15.3MPa	5MPa	8MPa	10MPa	13MPa	15.3MPa
	Number of Tums			13					13					18					23										26		
	Thrust (KN)	19.6	23.9	26.9	32.3	34.7	26.1	31.7	35.4	41.0	45.2	28.7	35.1	39.4	45.9	51.7	32.1	42.6	50.2	61.7	70.5	47.4	64.3	75.5	92.4	105.3	49.6	69.8	83.2	103.4	118.9
	Torque (N*M)	48.8	59.8	67.2	78.1	86.6	71.5	86.7	96.8	112.1	123.8	78.4	96.1	107.9	125.6	141.3	95.6	126.6	179.4	183.6	209.8	176.0	238.6	280.3	342.9	390.8	190.3	267.8	319.4	396.8	456.2
Class 1500	Pressure Rating	5MPa	10MPa	15MPa	20MPa	25.5MPa	5MPa	10MPa	15MPa	20MPa	25.5MPa	5MPa	10MPa	15MPa	20MPa	25.5MPa	5MPa	10MPa	15MPa	20MPa	25.5MPa	5MPa	10MPa	15MPa	20MPa	25.5MPa	5MPa	10MPa	15MPa	20MPa	25.5MPa
	Number of Tums			12					13					17					17										25		
	Thrust (KN)	21.1	28.5	35.8	43.1	51.2	28.4	37.6	46.9	56.2	66.4	32.4	43.7	55.7	68.8	83.1	39.3	56.2	75.0	93.7	114.3	66.4	103.9	141.5	179.1	220.4	56.4	88.3	120.3	152.2	187.3
	Torque (N*M)	52.7	71.1	89.4	107.7	127.8	77.6	103.0	128.3	153.7	181.8	96.4	130.0	165.8	204.5	247.1	132.0	189.0	251.9	314.9	384.2	270.6	423.7	576.9	730.0	898.4	230.0	360.1	490.4	620.5	763.6
Class 2500	Pressure Rating	10MPa	20MPa	30MPa	37MPa	42.5MPa	10MPa	20MPa	30MPa	37MPa	42.5MPa	10MPa	20MPa	30MPa	37MPa	42.5MPa	10MPa	20MPa	30MPa	37MPa	42.5MPa						10MPa	20MPa	30MPa	37MPa	42.5MPa
	Number of Tums			10										14					14										20		
	Thrust (KN)	28.0	41.1	54.2	63.4	70.6	39.3	57.5	75.6	88.3	98.3	43.7	64.5	85.4	99.9	111.4	54.8	82.8	110.8	130.4	145.8						80.2	131.2	182.2	217.9	246.0
	Torque (N*M)	69.9	102.6	135.4	158.3	176.3	107.6	157.2	206.9	241.6	268.9	130	191.9	254	297.3	331.4	184.1	278.2	372.3	438.1	489.9						346.2	566.3	786.4	940.5	1061.6

Class	Size	8”					10”					12”					14”					16”					18”				
Class 150	Pressure Rating	0.6MPa	1MPa	1.5MPa	2MPa	-	0.6MPa	1MPa	1.5MPa	2MPa	-	0.6MPa	1MPa	1.5MPa	2MPa	-	0.6MPa	1MPa	1.5MPa	2MPa	-	0.6MPa	1MPa	1.5MPa	2MPa	-	0.6MPa	1MPa	1.5MPa	2MPa	-
	Number of Tums			43					42					51					55					64					73		
	Thrust (KN)	23.1	24.9	27.3	33.1	-	28.8	31.2	37.5	47.1	-	36.9	40.0	52.6	66.1	-	40.7	44.4	60.1	75.9	-	48.2	55.2	75.9	96.6	-	55.7	67.1	93.5	120.0	-
	Torque (N*M)	68.6	74.2	81.2	98.4	-	96.8	104.9	126.1	158.1	-	132.6	143.9	189.2	238.0	-	156.4	170.5	230.5	291.3	-	196.7	224.9	309.4	393.9	-	240.3	289.7	403.7	517.6	-
Class 300	Pressure Rating	1MPa	2MPa	3MPa	4MPa	5.1MPa	1MPa	2MPa	3MPa	4MPa	5.1MPa	1MPa	2MPa	3MPa	4MPa	5.1MPa	1MPa	2MPa	3MPa	4MPa	5.1MPa	1MPa	2MPa	3MPa	4MPa	5.1MPa	1MPa	2MPa	3MPa	4MPa	5.1MPa
	Number of Tums			35					43					51					56					64					71		
	Thrust (KN)	26.2	34.5	47.3	60.1	74.2	34.5	50.6	69.9	89.2	110.5	40.7	67.0	94.2	121.5	151.4	45.9	77.7	109.7	141.7	176.9	55.9	97.5	139.2	180.8	226.5	72.6	124.4	176.2	228.0	285.0
	Torque (N*M)	87.9	116.0	159.0	202.0	249.3	124.1	182.1	251.6	321.2	397.7	156.3	257.1	361.7	466.2	581.2	187.2	316.8	447.2	577.6	721.0	241.4	420.9	600.5	780.1	977.6	330.4	566.3	802.2	1038.2	1297.7
Class 600	Pressure Rating	3MPa	5MPa	6.5MPa	8MPa	10.2MPa	3MPa	5MPa	6.5MPa	8MPa	10.2MPa	3MPa	5MPa	6.5MPa	8MPa	10.2MPa	3MPa	5MPa	6.5MPa	8MPa	10.2MPa	3MPa	5MPa	6.5MPa	8MPa	10.2MPa	3MPa	5MPa	6.5MPa	8MPa	10.2MPa
	Number of Tums			34					42					50					41					47					53		
	Thrust (KN)	48.8	70.7	87.1	103.6	127.6	64.0	96.5	120.9	145.3	181.1	90.7	136.5	170.8	205.2	255.5	105.9	159.5	199.7	240	299	128.9	197.8	249.5	301.2	377.1	139.7	214.5	270.5	326.6	408.8
	Torque (N*M)	187.3	271.4	334.4	397.5	489.9	276.3	416.6	521.9	627.2	781.6	413.1	621.6	777.9	934.3	1163.7	554.5	841.8	1054	1265.7	1577.6	710.7	1091.1	1376.3	1661.5	2079.9	803.8	1234	1556.7	1879.4	2352.6
Class 900	Pressure Rating	5MPa	8MPa	10MPa	13MPa	15.3MPa	5MPa	8MPa	10MPa	13MPa	15.3MPa	5MPa	8MPa	10MPa	13MPa	15.3MPa	5MPa	8MPa	10MPa	13MPa	15.3MPa	5MPa	8MPa	10MPa	13MPa	15.3MPa	5MPa	8MPa	10MPa	13MPa	15.3MPa
	Number of Tums			34					31					36					41					47					34		
	Thrust (KN)	71.8	104.0	125.4	157.6	182.2	113.4	161.3	193.2	241.1	277.9	145.8	211.4	255.0	320.6	370.8	171.1	251.7	305.5	386.2	448.0	184.8	271.9	330.0	417.1	483.9	238.9	349.3	422.9	533.2	617.9
	Torque (N*M)	310.0	448.8	541.3	680.0	786.3	571.3	812.7	973.6	1214.9	1400.0	769.5	1115.3	1345.8	1691.7	1956.8	943.5	1388.4	1685.0	2129.9	2471.1	1063.6	1564.9	1899.0	2400.2	2784.5	1719.8	2514.4	3044.0	3838.5	4447.7
Class 1500	Pressure Rating	5MPa	10MPa	15MPa	20MPa	25.5MPa	5MPa	10MPa	15MPa	20MPa	25.5MPa	5MPa	10MPa	15MPa	20MPa	25.5MPa	5MPa	10MPa	15MPa	20MPa	25.5MPa	5MPa	10MPa	15MPa	20MPa	25.5MPa	5MPa	10MPa	15MPa	20MPa	25.5MPa
	Number of Tums			24					29					35										29							
	Thrust (KN)	90.3	141.4	192.4	243.6	299.8	122.1	197.9	273.7	349.6	433.0	149.6	249.4	349.2	449.0	558.7	186.4	308.3	430.3	552.4	686.7	198.0	331.8	465.7	599.5	746.8	273.8	446.5	619.2	791.9	981.8
	Torque (N*M)	454.8	712.2	969.7	1227.1	1510.4	702.5	1138.8	1575.1	2011.4	2491.4	932.3	1554.1	2175.9	2797.7	3481.7	1340.4	2219.1	3097.8	3976.6	4943.3	1424.8	2388.7	3352.2	4315.8	5375.7	2363.5	3853.9	5344.3	6834.7	8474.1
Class 2500	Pressure Rating	10MPa	20MPa	30MPa	37MPa	42.5MPa	10MPa	20MPa	30MPa	37MPa	42.5MPa	10MPa	20MPa	30MPa	37MPa	42.5MPa	10MPa	20MPa	30MPa	37MPa	42.5MPa	10MPa	20MPa	30MPa	37MPa	42.5MPa					
	Number of Tums			19					16					19					24					25							
	Thrust (KN)	131.6	214.4	297.2	355.1	400.7	194.8	321.1	447.5	535.6	605.6	248.0	418.1	588.2	707.3	800.9	310.8	512.1	713.4	854.4	965.1	396.2	671.9	947.7	1154.0	1292.3					
	Torque (N*M)	725.9	1182.5	1639.1	1958.7	2209.9	1355.7	2235.0	3114.2	3731.3	4214.9	1903.6	3209.5	4515.5	5429.5	6149.8	2534.4	4175.8	5817.1	6966.1	7868.9	3608.6	6119.8	8631.0	10510.8	11770.0					

Note: 1. All above data are based on Single Head thread.

2. Torques shown in these tables are to be used as a guide for actuaor selection. A safety factor of 1.25 -1.5 is recommended for actuator sizing.

Gate Valve

Class	Size	20”					22”					24”					26”					28”					30”				
Class 150	Pressure Rating	0.6MPa	1MPa	1.5MPa	2MPa	-	0.6MPa	1MPa	1.5MPa	2MPa	-	0.6MPa	1MPa	1.5MPa	2MPa	-	0.6MPa	1MPa	1.5MPa	2MPa	-	0.6MPa	1MPa	1.5MPa	2MPa	-	1MPa	1.5MPa	2MPa	-	-
	Number of Tums	81					68					74					80					85					93				
	Thrust (KN)	69.8	75.5	104.0	132.4	-	79.8	101.5	141.3	181.1	-	92.2	104.2	145.5	186.9	-	94.3	123.4	172.2	221.0	-	90.5	126.3	182.9	239.6	-	158.1	223.2	288.4	-	-
	Torque (N*M)	317.7	343.9	473.4	602.9	-	402.1	511.6	712.1	912.6	-	486.4	549.9	768.0	986.2	-	542.9	710.3	990.9	1271.4	-	520.9	726.5	1052.5	1378.5	-	985.4	1391.1	1796.9	-	-
Class 300	Pressure Rating	1MPa	2MPa	3MPa	4MPa	5.1MPa	1MPa	2MPa	3MPa	4MPa	5.1MPa	1MPa	2MPa	3MPa	4MPa	5.1MPa	1MPa	2MPa	3MPa	4MPa	5.1MPa	1MPa	2MPa	3MPa	4MPa	5.1MPa	1MPa	2MPa	3MPa	4MPa	5.1MPa
	Number of Tums	61					66					74					79					87					61				
	Thrust (KN)	77.8	133.6	189.5	245.3	306.7	90.0	156.0	222.0	288.0	348.0	107.3	188.7	270.1	351.5	441.0	124.5	221.0	317.5	414.0	520.2	140.3	252.6	364.9	477.3	600.8	176.7	300.0	430.9	561.8	705.8
	Torque (N*M)	391.9	673.2	954.6	1235.9	1545.4	474.6	822.9	1171.3	1519.6	1836.2	617.5	1085.9	1544.2	2022.6	2537.7	775.5	1377.0	1978.5	2580.1	3241.8	874.0	1574.0	2274.0	2974.1	3744.1	1356.4	2302.7	3307.5	4312.4	5417.7
Class 600	Pressure Rating	3MPa	5MPa	6.5MPa	8MPa	10.2MPa						3MPa	5MPa	6.5MPa	8MPa	10.2MPa						3MPa	5MPa	6.5MPa	8MPa	10.2MPa	3MPa	5MPa	6.5MPa	8MPa	10.2MPa
	Number of Tums	59										46										54					58				
	Thrust (KN)	166.5	257.7	326.1	394.5	494.8						215.8	346.9	445.3	543.7	687.9						327.9	506.4	640.2	774.1	970.4	366	569.9	722.8	875.7	1100
	Torque (N*M)	1037.3	1605.7	2032	2458.3	3083.5						1553.5	2497.5	3205.5	3913.5	4951.9						2830.2	4370.5	5525.8	6681	8375.4	3159.2	4918.9	6238.6	7558.4	9494
Class 900	Pressure Rating	5MPa	8MPa	10MPa	13MPa	15.3MPa						5MPa	8MPa	10MPa	13MPa	15.3MPa															
	Number of Tums	38																													
	Thrust (KN)	279.5	415.7	506.5	642.6	747.0						397.4	586.6	712.7	901.9	1046.9															
	Torque (N*M)	2145.5	3190.8	3887.7	4933.0	5734.4						3240.5	4782.9	5811.1	7353.4	8536.0															
Class 1500	Pressure Rating	5MPa	10MPa	15MPa	20MPa	25.5MPa						5MPa	10MPa	15MPa	20MPa	25.5MPa															
	Number of Tums																														
	Thrust (KN)	335.4	553.6	771.8	990.0	1230						454.0	769.6	1085.2	1400.8	1747.9															
	Torque (N*M)	3054.4	5041.9	7029.4	9016.9	11203.1						5001.5	8477.9	11954.3	15430.7	19254.8															

Class	Size	32”					34”					36”					38”					40”				
Class 150	Pressure Rating	1MPa	1.5MPa	2MPa	-	-	1MPa	1.5MPa	2MPa	-	-	1MPa	1.5MPa	2MPa	-	-	1MPa	1.5MPa	2MPa	-	-	1MPa	1.5MPa	2MPa	-	-
	Number of Tums	97					68					72					76					81				
	Thrust (KN)	171.1	242.6	314.2	-	-	196.9	278.5	360.1	-	-	217.0	307.5	398.0	-	-	236.2	337.2	438.1	-	-	261.7	373.4	485.2	-	-
	Torque (N*M)	1065.9	1511.9	1957.8	-	-	1370.1	1938.0	2505.9	-	-	1561.7	2213.3	2864.9	-	-	1813.4	2588.1	3362.8	-	-	2008.5	2866.3	3724.1	-	-
Class 300	Pressure Rating	1MPa	2MPa	3MPa	4MPa	5.1MPa	1MPa	2MPa	3MPa	4MPa	5.1MPa	1MPa	2MPa	3MPa	4MPa	5.1MPa						1MPa	2MPa	3MPa	4MPa	5.1MPa
	Number of Tums						68					73														
	Thrust (KN)	184.4	330.5	476.7	622.9	783.7	199.0	350.0	500.0	652.0	818.0	237.0	420.3	603.5	786.8	988.4						282.2	510.7	739.2	967.7	1219.1
	Torque (N*M)	1415.1	2537.3	3659.5	4781.6	6016.0	1625.0	2856.0	4087.0	5318.0	6672.0	1932.2	3426.6	4921.1	6415.5	8059.3						3050.0	5519.6	7989.3	10459.0	13175.6
Class 600	Pressure Rating	3MPa	5MPa	6.5MPa	8MPa	10.2MPa	3MPa	5MPa	6.5MPa	8MPa	10.2MPa	3MPa	5MPa	6.5MPa	8MPa	10.2MPa						3MPa	5MPa	6.5MPa	8MPa	10.2MPa
	Number of Tums						65																			
	Thrust (KN)	382.2	595	754.7	914.4	1148.6	459.5	719.4	914.2	1109.1	1395	524.2	821.8	1045	1268.2	1595.6						682.9	1083.2	1383.5	1683.7	2124.1
	Torque (N*M)	3662.7	5703.4	7234	8764.6	11009.5	4192.8	6551.9	8326.9	10102	12705.5	5527.7	8665.8	11019.4	13372.9	16824.7						7522.4	11932.1	15240.3	18546.8	23397.6

Class	Size	42”					48”					52”					54”				
Class 150	Pressure Rating	1MPa	1.5MPa	2MPa	-	-	1MPa	1.5MPa	2MPa	-	-	1MPa	1.5MPa	2MPa	-	-	1MPa	1.5MPa	2MPa	-	-
	Number of Tums	82					101										109				
	Thrust (KN)	298.9	421.5	554.1	-	-	376.5	536.4	696.3	-	-	445.3	635.1	824.9	-	-	472.4	675.8	879.2	-	-
	Torque (N*M)	2437.0	3436.6	4436.2	-	-	3249.3	4629.4	6009.5	-	-	4055.6	5784.5	7513.4	-	-	5219.2	7466.3	9713.4	-	-
Class 300	Pressure Rating	1MPa	2MPa	3MPa	4MPa	5.1MPa	1MPa	2MPa	3MPa	4MPa	5.1MPa										
	Number of Tums																				
	Thrust (KN)	307.0	548.4	789.8	1031.3	1296.8	389.4	714.4	1039.3	1364.3	1504.8										
	Torque (N*M)	2796.0	4995.2	7194.0	9392.7	11811.3	4675.0	8577.6	12478.1	16379.5	18066.1										
Class 600	Pressure Rating	3MPa	5MPa	6.5MPa	8MPa	10.2MPa															
	Number of Tums	82																			
	Thrust (KN)	678.3	1079.5	1390.6	1683	2125															
	Torque (N*M)	7803	12414.3	1530	19331.6	24404.4															

Note: 1. Torques in the tables are calculations at ambient temperature. Considerations of proper safety factors are needed for actuator selection, normally 1.25-1.5.
2. Where the actual pressure is lower than values in the tables, select the most approximate one from those exceeding actual pressure.

Globe Valve

Class	Size	2”					2-1/2”					3”					4”					5”					6”					8”				
Class 150	Pressure Rating	0.6MPa	1MPa	1.5MPa	2MPa	-	0.6MPa	1MPa	1.5MPa	2MPa	-	0.6MPa	1MPa	1.5MPa	2MPa	-	0.6MPa	1MPa	1.5MPa	2MPa	-	0.6MPa	1MPa	1.5MPa	2MPa	-	0.6MPa	1MPa	1.5MPa	2MPa	-	0.6MPa	1MPa	1.5MPa	2MPa	-
	Number of Turns	5					6					6					7					8					10					10				
	Thrust (KN)	7.7	9	11	13	-	9.4	12.2	15.1	17.9	-	12.1	15.0	20.0	24.0	-	18.1	23.0	30.0	37.0	-	24.2	33.0	44.0	56.0	-	29.5	42.0	58.0	73.0	-	43.6	65.0	91.0	117.0	-
	Torque (N*M)	15.1	18.1	21.8	25.5	-	20.6	26.9	33.2	39.5	-	30.8	39.3	50.0	60.6	-	50.3	65.2	83.7	102.3	-	73.2	100.4	134.4	168.3	-	89.4	127.3	174.7	222.1	-	149.3	221.3	311.3	401.3	-
Class 300	Pressure Rating	1MPa	2MPa	3MPa	4MPa	5.1MPa	1MPa	2MPa	3MPa	4MPa	5.1MPa	1MPa	2MPa	3MPa	4MPa	5.1MPa	1MPa	2MPa	3MPa	4MPa	5.1MPa	1MPa	2MPa	3MPa	4MPa	5.1MPa	1MPa	2MPa	3MPa	4MPa	5.1MPa	1MPa	2MPa	3MPa	4MPa	5.1MPa
	Number of Turns	5					6					6					7					10					8					9				
	Thrust (KN)	9.2	12.9	16.7	24.6	24.6	12.2	17.9	23.6	29.3	35.6	15.4	23.8	32.1	40.5	49.7	24.1	37.4	50.7	64.0	78.6	38.6	61.1	83.5	106.0	130.7	49.9	81.3	112.6	144.0	178.5	82.0	135.9	189.8	243.7	303.0
	Torque (N*M)	18.1	25.5	32.9	48.4	48.4	26.9	39.5	52.0	64.6	78.4	39.3	60.6	82.0	103.3	126.7	72.7	113.0	153.3	193.6	237.9	141.3	223.6	305.8	388.1	478.5	206.5	336.1	465.8	595.5	738.2	378.0	626.6	875.3	1124.0	1397.5
Class 600	Pressure Rating	3MPa	5MPa	6.5MPa	8MPa	10.2MPa	3MPa	5MPa	6.5MPa	8MPa	10.2MPa	3MPa	5MPa	6.5MPa	8MPa	10.2MPa	3MPa	5MPa	6.5MPa	8MPa	10.2MPa	3MPa	5MPa	6.5MPa	8MPa	10.2MPa	3MPa	5MPa	6.5MPa	8MPa	10.2MPa	3MPa	5MPa	6.5MPa	8MPa	10.2MPa
	Number of Turns	4					5					6					6					7					8					6				
	Thrust (KN)	20.1	27.6	33.3	38.9	47.2	29.7	41.1	49.6	58.2	70.7	38.5	55.2	67.8	80.3	98.7	60.1	86.7	106.7	126.7	156.0	90.6	135.5	169.2	202.9	252.3	129.1	191.8	238.8	285.9	354.8	202.2	310.0	390.9	471.8	590.4
	Torque (N*M)	51.3	70.4	84.8	99.2	120.3	82.7	114.5	138.3	162.1	197.0	116.4	167.0	205.0	242.9	298.5	220.1	317.7	390.8	463.9	571.2	374.7	560.5	699.9	839.2	1043.7	595.4	884.6	1101.5	1318.4	1636.5	1083.3	1661.1	2094.4	2527.7	3163.3
Class 900	Pressure Rating	5MPa	8MPa	10MPa	13MPa	15.3MPa	5MPa	8MPa	10MPa	13MPa	15.3MPa	5MPa	8MPa	10MPa	13MPa	15.3MPa	5MPa	8MPa	10MPa	13MPa	15.3MPa						5MPa	8MPa	10MPa	13MPa	15.3MPa	5MPa	8MPa	10MPa	13MPa	15.3MPa
	Number of Turns	4										4					6										6					7				
	Thrust (KN)	36.2	46.3	53.0	63.1	70.9	46.7	61.7	71.7	86.7	98.2	59.6	82.4	97.6	120.3	137.7	96.2	133.9	159.1	196.8	225.7						197.5	281.1	336.8	420.4	484.5	312.8	459.8	557.8	704.7	817.4
	Torque (N*M)	109.4	140.0	160.3	190.9	214.4	160.0	211.4	245.6	297.0	336.4	204.3	282.2	334.1	412.0	471.7	398.1	554.1	658.1	814.1	933.8						1058.2	1506.0	1804.6	2252.4	2595.7	1973.4	2900.4	3518.5	4445.6	5156.3
Class 1500	Pressure Rating	5MPa	10MPa	15MPa	20MPa	25.5MPa	5MPa	10MPa	10MPa	20MPa	25.5MPa	5MPa	10MPa	15MPa	20MPa	25.5MPa	5MPa	10MPa	15MPa	20MPa	25.5MPa						5MPa	10MPa	15MPa	20MPa	25.5MPa	5MPa	10MPa	15MPa	20MPa	25.5MPa
	Number of Turns	5										4					4										8					6				
	Thrust (KN)	39.4	56.2	73.1	89.9	108.5	50.3	75.3	100.3	125.3	152.8	79.8	120.8	161.7	202.6	247.6	131.1	199.9	268.7	337.6	413.3						220.8	362.3	503.9	645.4	801.1	319.1	530.0	740.8	951.7	1183.6
	Torque (N*M)	119.1	170.1	221.0	272.0	328.1	172.4	258.0	343.6	429.2	523.4	330.3	499.5	668.8	838.0	1024.2	671.1	1023.5	1375.9	1728.4	2116.1						1392.5	2285.4	3178.3	4071.2	5053.4	2488.4	4132.8	5777.2	7421.6	9230.4
Class 2500	Pressure Rating	10MPa	20MPa	30MPa	37MPa	42.5MPa	10MPa	20MPa	30MPa	37MPa	42.5MPa	10MPa	20MPa	30MPa	37MPa	42.5MPa	10MPa	20MPa	30MPa	37MPa	42.5MPa						5MPa	10MPa	15MPa	20MPa	25.5MPa	5MPa	10MPa	15MPa	20MPa	25.5MPa
	Number of Turns	4										5					4										6					5				
	Thrust (KN)	53.9	78.7	103.6	121.0	134.7	84.4	130.2	175.9	208.0	233.1	114.8	185.1	255.4	304.6	343.2	181.0	284.5	387.9	460.3	517.2						273.3	437.6	601.8	716.7	807.0	498.8	804.1	1109.5	1323.2	1491.2
	Torque (N*M)	184.4	269.6	354.8	414.5	461.3	309.2	476.7	644.3	761.6	853.7	474.8	765.6	1056.4	1259.9	1419.9	969.9	1524.0	2078.2	2466.1	2770.9						1937.0	3100.7	4264.3	5078.9	5718.9	4363.4	7034.8	9706.3	11576.3	13045.6

Class	Size	10”					12”					14”					16”					18”					20”					24”				
Class 150	Pressure Rating	0.6MPa	1MPa	1.5MPa	2MPa	-	0.6MPa	1MPa	1.5MPa	2MPa	-	0.6MPa	1MPa	1.5MPa	2MPa	-	0.6MPa	1MPa	1.5MPa	2MPa	-	0.6MPa	1MPa	1.5MPa	2MPa	-	0.6MPa	1MPa	1.5MPa	2MPa	-	0.6MPa	1MPa	1.5MPa	2MPa	-
	Number of Turns	12					14					13					15																			
	Thrust (KN)	68.3	101.0	143.0	184.0	-	98.7	146.0	205.0	264.0	-	113.8	170.0	240.0	310.0	-	147.1	224.0	319.0	415.0	-	181.9	280.0	402.0	525.0	-	220.8	343.0	495.0	648.0	-	315.4	491.0	711.0	931.0	-
	Torque (N*M)	282.5	419.7	591.1	762.6	-	455.3	672.7	944.5	1216.3	-	582.5	869.7	1228.7	1587.7	-	787.9	1197.8	1710.2	2222.5	-	1061.2	1632.5	2346.6	3060.7	-	1392.6	2162.4	3124.7	4087.1	-	2459.6	3831.3	5545.9	7260.6	-
Class 300	Pressure Rating	1MPa	2MPa	3MPa	4MPa	5.1MPa	1MPa	2MPa	3MPa	4MPa	5.1MPa	1MPa	2MPa	3MPa	4MPa	5.1MPa	1MPa	2MPa	3MPa	4MPa	5.1MPa	1MPa	2MPa	3MPa	4MPa	5.1MPa	1MPa	2MPa	3MPa	4MPa	5.1MPa					
	Number of Turns	9					11										10										11									
	Thrust (KN)	115.2	198.1	281.0	363.9	455.1	152.9	270.8	388.6	506.5	636.1	178.0	318.2	458.4	598.7	752.9	239.8	431.1	622.3	813.6	1024.0	308.9	545.3	781.7	1018.1	1278.1	321.8	571.0	820.2	1069.5	1343.6					
	Torque (N*M)	617.4	1061.5	1505.6	1949.7	2438.3	891.8	1579.2	2266.7	2954.1	3710.3	1122.7	2007.3	2891.9	3776.5	4749.5	1756.3	3157.0	4557.6	5958.3	7499.1	2555.7	4511.5	6467.2	8422.9	10574.2	2662.0	4723.9	6785.9	8847.9	11116.0					
Class 600	Pressure Rating	3MPa	5MPa	6.5MPa	8MPa	10.2MPa	3MPa	5MPa	6.5MPa	8MPa	10.2MPa	3MPa	5MPa	6.5MPa	8MPa	10.2MPa	3MPa	5MPa	6.5MPa	8MPa	10.2MPa	3MPa	5MPa	6.5MPa	8MPa	10.2MPa										
	Number of Turns	9					8																													
	Thrust (KN)	289.8	451.5	572.9	694.2	872.1	347.3	518.3	646.6	774.9	963.1	450.1	689.7	869.4	1049.1	1312.7	566.2	873.1	1103.3	1333.6	1671.2	674.9	1044.2	1321.2	1598.2	2004.4										
	Torque (N*M)	1828.0	2848.4	3613.6	4378.8	5501.2	2873.0	4288.3	5349.8	6411.3	7968.2	3723.7	5706.2	7193.1	8679.9	10860.6	5222.4	8053.6	10177.0	12300.4	15414.7	6866.5	10624.3	13442.6	16261.0	20394.5										
Class 900	Pressure Rating	5MPa	8MPa	10MPa	13MPa	15.3MPa	5MPa	8MPa	10MPa	13MPa	15.3MPa																									
	Number of Turns	7					8																													
	Thrust (KN)	474.1	702.8	855.3	1084.1	1259.5	714.4	1047.3	1269.3	1602.2	1857.4																									
	Torque (N*M)	3696.8	5480.9	6670.2	8454.2	9822.0	6929.2	10158.2	12310.9	15539.9	18015.5																									
Class 1500	Pressure Rating	5MPa	10MPa	15MPa	20MPa	25.5MPa	5MPa	10MPa	15MPa	20MPa	25.5MPa																									
	Number of Turns																																			
	Thrust (KN)	512.4	855.7	1198.9	1542.1	1919.6	600.1	1014.0	1427.9	1841.8	2297.2																									
	Torque (N*M)	4483.1	7485.7	10488.3	13491.0	16793.9	5820.1	9834.8	13849.6	17864.3	22280.4																									
Class 2500	Pressure Rating	10MPa	20MPa	30MPa	37MPa	42.5MPa																														
	Number of Turns																																			
	Thrust (KN)	612.2	1021.3	1430.5	1716.9	1941.9																														
	Torque (N*M)	5646.8	9420.5	13194.2	15835.8	17911.4																														

Note: 1. Torques in the tables are calculations at ambient temperature. Considerations of proper safety factors are needed for actuator selection, normally 1.25-1.5.
2. Where the actual pressure is lower than values in the tables, select the most approximate one from those exceeding actual pressure.

BA Series for Gate & Globe Valves

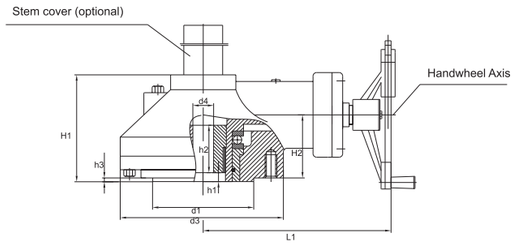

A

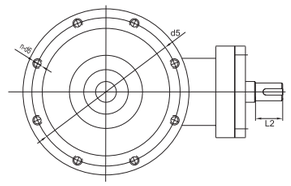

View A

BA-Y Series for Globe Valves

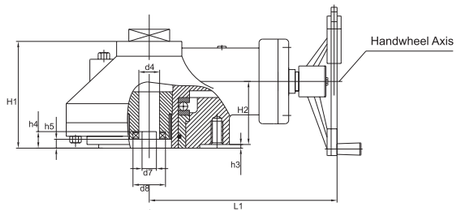

A

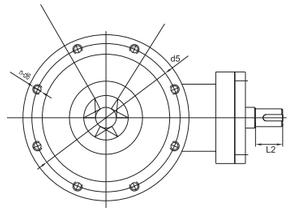

View A

1.Main Material:

Name of parts	Housing	Bevel gear	Output shaft	Stem nut
Material	ASTM A216-WCB	AISI 1045 & 5140	AISI 1045	ASTM A439-D2
Material	ASTM A352-LCB	AISI 1045 & 5140	AISI 1045	ASTM A439-D2
Material	QT450-10	35CrMoA	42CrMo	QAL9-4

2.Technical Parameters:

Item	Type								
	BA000	BA00	BA0	BA1	BA2	BA3	BA4	BA5	BA6
Allowable torque(N.m)	200	400	750	1500	3000	6000(9000)	10000(15000)	22100	32000
Allowable thrust(KN)	40	100	150	200	350	840	1400	2400	2745
Reduction ratio	4:1	3:1	3:1	4:1:1	6:1	58:1(86:1)	86:1(104:1)	104:1(128:1)	125:1
Allowable stem díameter(mm)	25	42	55	62	75	115	125	125	150
Handwheel diameter(mm)	305	305	305	460	610	810	1000	1200	1200

Note: The allowable torque and the ratio parammeter in the brackets will be selected by the manufacturer.

3.Flange Type and Dimensions (mm)

Code Type	L1	L2	H1	H2	d1	d2	d3	d4(max)	d5	n-d6	d7	d8	h1	h2	h3	h4	h5	Flange type
BA000	200	45	100	59	70(f8)		146	25	102	4-M10	40	51	1	42	3	8	4	F10
BA00	210	60	122	76	100(f8)		178	42	140	4-M16	50	64.5	1	60	4	10	5	F14
BA0	232	60	135	84	130(f8)		210	55	165	4-M20	63	79	1	70	5	15	5	F16
BA1	283	60	160	95	200(f8)		289	62	254	8-M16	70	89	1	75	5	15	5	F25
BA2	370	60	220	140	230(f8)		346	75	298	8-M20	95	119	15	110	5	18	5	F30
BA3	610	60	330	328	260(f8)	428	510	115	356	8-M30	128	166	30	168	5	18	5	F35
BA4	668	110	360	410	300(f8)	475	620	125	406	8-M36	138	188	35	180	8	25	5	F40
BA5	668	110	360	410	370	544	690	125	483	12-M36	150	210	35	180	8	32	5	F48
BA6	1020	60	500	282	470	686	810	150	603	20-M36	178	240	40	230	8	40	5	F60

NEWAY reserves the right to change design, materials or specifications without notice and free of obligation to furnish or install such changes on products previouly sold.

With the enhancement of people ecological awareness since 1960's, especially under the backaround of nowaday quick economic globalization, protecting environment is becoming common understanding in present global development, whether developed or developing countries, and had led to born associated law and regulation in different fields, including modern process industries.

Industrial valves are one of main pollution sources in modern process industries because of fugitive emission. To minimize the risk of process media leaked through valves to human health, safety and environment, Neway developed low emission technology for all series valves, which featured the essential function of controlling effectively the fugitive emission leakage of various media from valves in virtue of emission defense material using and special structure design, and these valves are measured and tested in accordance with ISO 15848 or Shell SPE 77/312.

Design Features

Low Emission Packing

Neway actively works with reputable and industry leading sealing solution companies to create low emission solutions that can cover valves from cryogenic to extreme high temperature in variety of endurance range down to 10ppm without usage of bellow seal.

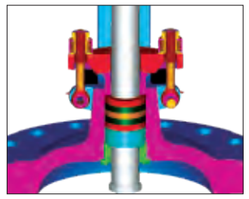

Stuffing box and stem finish

All surface finish for Neway valve's stem and stuffing boxes are tightly controlled to achieve optimized surface finish for the designated sealing solution.

Optional live-loaded eye bolt

Live-loaded eye bolt is optional on customer request. The special structure can maintain a permanent packing stress in virtue of a set of belleville spring, and extend the low emission service life. Neway standard Belleville springs are protected by a weatherproof cap to keep them from environmental contamination so as to ensure a long and continual stable work life.

Fugitive Emission Valve Test

Neway full series low emission gate, globe and check valves hIn addition to type testing.Neway offers production testing capabilities to ISO 15848-2, Shell MESC 77/312 or other customized testing standards. The table below presents typical test parameters.

Test Standard	ISO 15848	Neway Acceptable Level	
Test Medium	97% Helium	Stem Seal Leakage Rate	SO 15848 class B $1.78x10^{-7}$ Pa.m^3/s (Per mm Stem diameter)
Test Pressure	Valve body pressure equals to the one specified in ASME B16.34 at selected temperature	Mechanical Cycles	100
Test Equipment	Helium Spectrometer	Temperature	-196 ~ 450°C

NEWAY reserves the right to change design, materials or specifications without notice and free of obligation to furnish or install such changes on products previouly sold.

NACE Introductionn Special Design Feature

For servicing H S-containing environments in oil and gas production,Neway offers NACE valve made of the component metal materials specially heat-treated and hardness-controlled in compliance with NACE standard Mr0175 or 0103, so as to resist all mechanisms of cracking that can be caused by H S, including sulfide stress cracking (SSC), stress corrosion cracking (SCC), and other hydrogen-induced cracking. Below table show typical Nace material configuration for Neway cast steel gate valves:

NACE Valves Compared to API 600 Valves

Valve Parts	ASTM Specification	API 600 Valves	Nace Valves
Body/Bonnet	A216 Gr. WCB	≤ 22HRC	≤ 22HRC
Wedge	A216 Gr. WCB or A217 CA15	Quenching + High Temperature Tempering 25-30HRC	Quenching + Double Tempering ≤ 22HRC
Seating Ring	A105 + Stellite 6 Overlayed	Stress Relieving Tempering Overlay hardness ≥ 38HRC	Stress Relieving Tempering Overlay hardness ≥ 38HRC
Stem	A182 F6a	Queching + High Temperature Tempering 17-22HRC	Queching + Double Tempering ≤ 22HRC
Gland	ANSI 420	Queching + High Temperature Tempering 31-35HRC	Queching + Double Tempering ≤ 22HRC
Backseat Bushing	ANSI 420	Queching + High Temperature Tempering 31-35HRC	Queching + Double Tempering ≤ 22HRC
Body/Bonnet Studs		ASTM A193 Grade B7	ASTM A193 Grade B7M
Body/Bonnet Nuts		ASTM A194 Grade 2H	ASTM A194 Grade 2HM

Special Design Feature

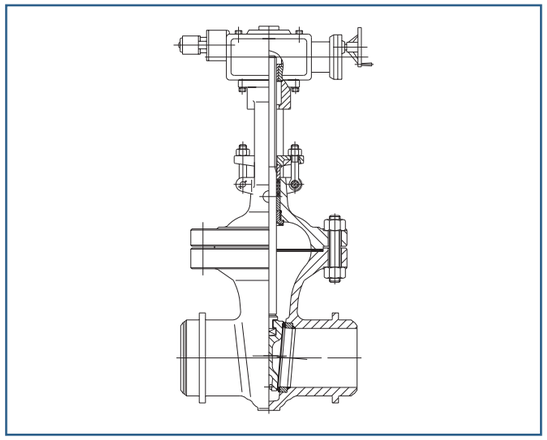

All gate and globe valves can be equipped with electric, Pneumatic or hydraulic actuator, per customer's specfication.

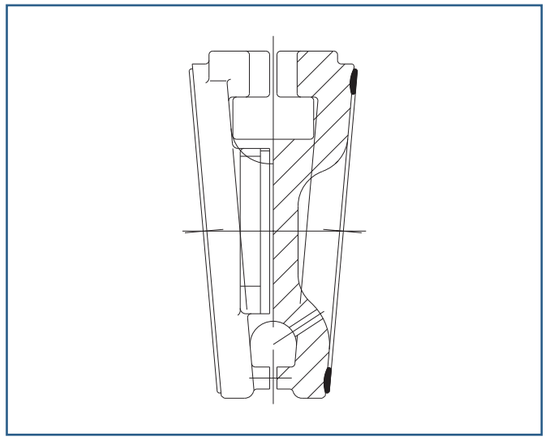

Pressure relief hole

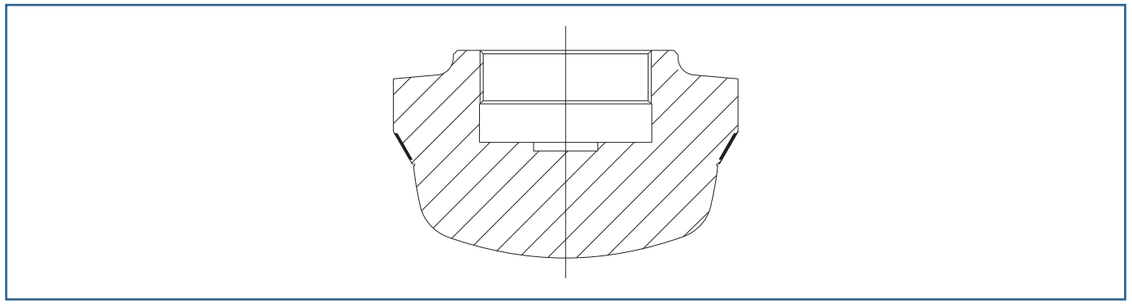

Parabola disc

Special Design Feature

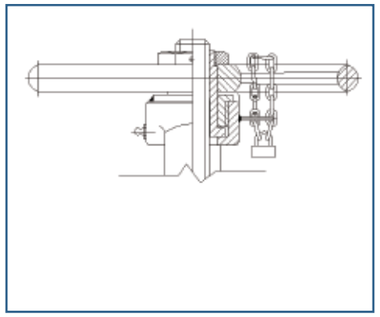

Locking device on the handwheel

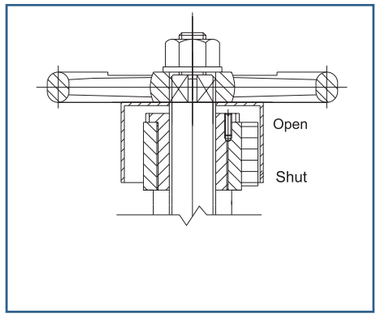

Position indicator on globe valves

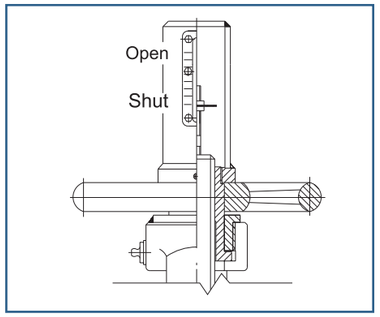

Position indicator on gate valves

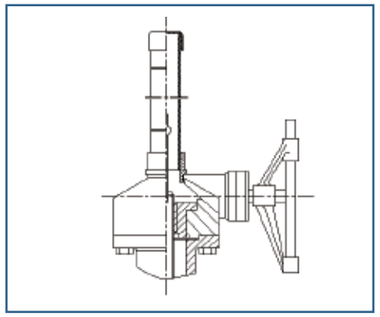

Position indicator on gear box

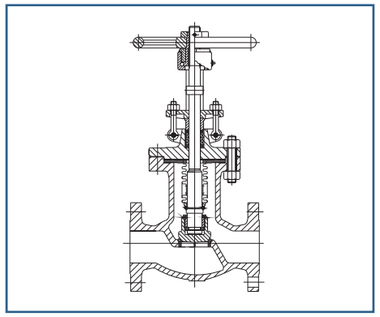

Casting steel bellows sealed valves

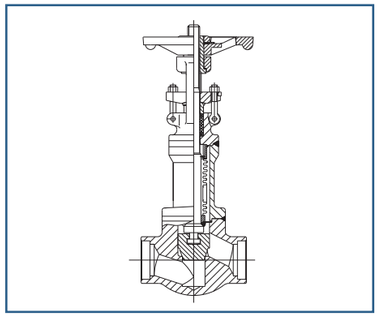

Forging steel bellows sealed valves

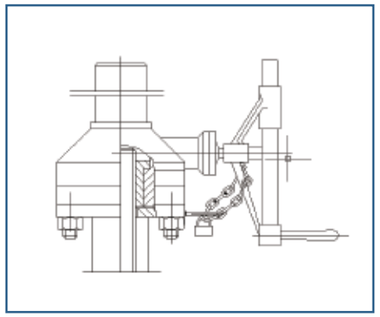

Locking device on the gear box

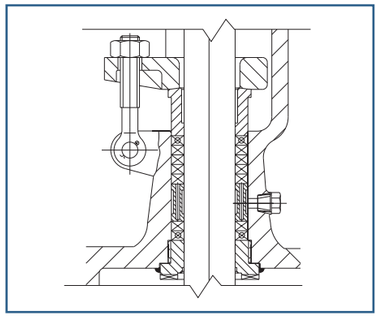

The lantern on the gate and globe valves

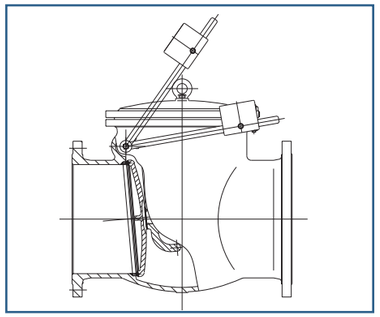

Check valves with damping box and equilibrium hammers

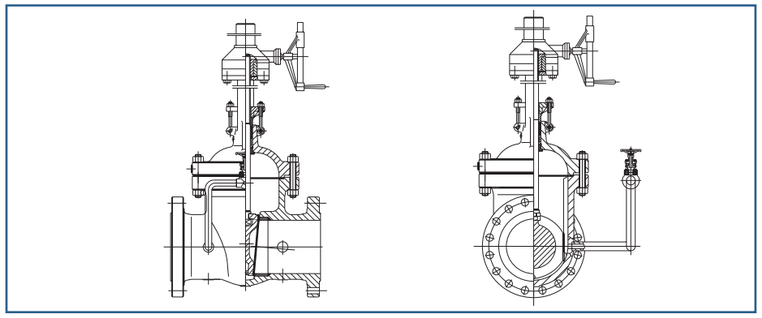

Special by-pass application

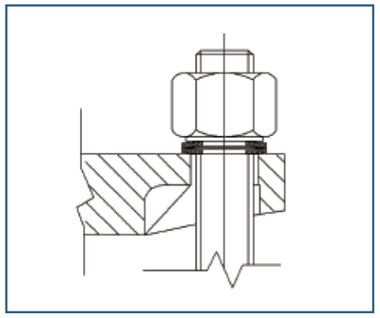

Live-loaded eye bolt